Uncontrolled Copy

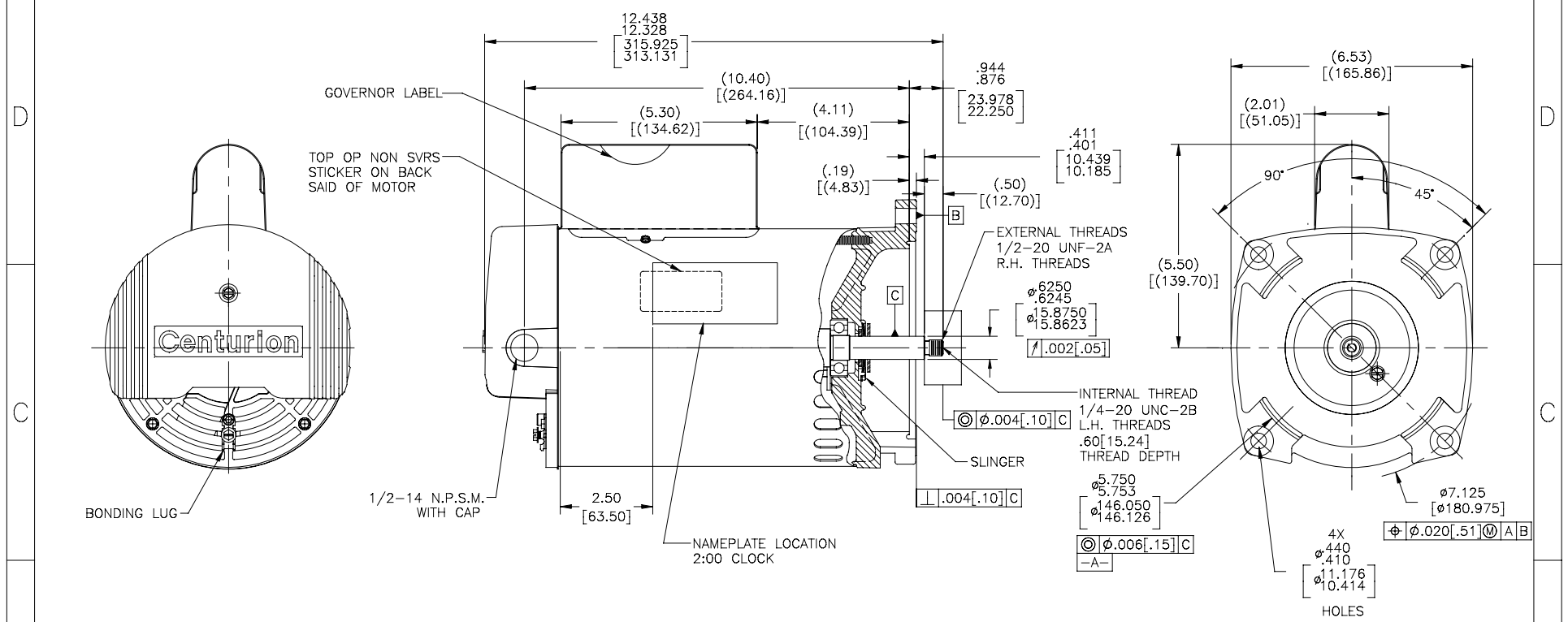

NAMEPLATE DATA	EXTERNAL CONNECTION DIAGRAM	NOTES
MODEL: F56AA37A01 CUST PN: B2853 HP: 1.0 SF: 1.25 ROT: CCWPE RPM: 3450 TYPE: CX CODE: L FORM: KJM FRAME: P56Y VOLTS: 230/115 AMPS: – MAX AMPS: – SF AMPS: 6.6/13.2 PH: 1 HZ: 60 INS: F AMB: 50°C DUTY: CONT. ENCLOSURE: ODP THERMALLY–PROTECTED	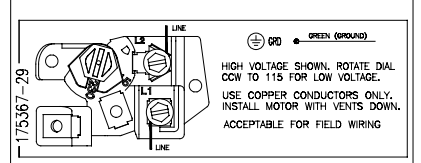	1. FOR THREADED SHAFT EXTENSION ECCENTRICITY OF THREADED PORTION OF SHAFT IS HELD WITHIN .004[.101] TOTAL GAGE READING WITH THE INDICATOR ON O.D. OF GROUND RING GAGE AS SHOWN. THE GAGE BEING STATIONARY WITH RESPECT TO THE ROTOR. 2. END PLAY NOT TO EXCEED .010[.254] MEASURED WITH NO RUST. 3. FINISH PAINT TO BE BLACK. 4. CONNECTED FOR 230V. DUAL VOLTAGE MOTOR. SEE CONNECTION DIAGRAM TO CHANGE VOLTS TO 115V.

PERFORMANCE CURVE		APPROVED SAMPLE	
16381911		B2847	
UL COMPONENT		CSA	
FILE#	CCN#	FILE#	GUIDE#
PENDING	PENDING	PENDING	PENDING
CUSTOMER	DISTRIBUTION		

DRAWING REVISION	REVISION BY	DATE
H	F.NAVARRO	09–29–2015
ECO	APPROVED BY	DATE
00185222	F.NAVARRO	09–29–2015

ECO DESCRIPTION
SEE ECO

COPYRIGHT REGAL BELOIT AMERICA, INC. ALL RIGHTS RESERVED.
PROPRIETARY AND CONFIDENTIAL INFORMATION – THIS DOCUMENT IS THE PROPERTY OF REGAL BELOIT AMERICA, INC. (REGAL) AND CONTAINS OWNER'S PROPRIETARY INFORMATION. ANY PERSON, CORPORATION, OR OTHER FIRM RECEIVING IT IS DEEMED, BY RECEIVING IT, TO AGREE: THAT IT, AND/OR ANY PART OF IT, SHALL NOT BE DISCLOSED TO ANY PERSON, CORPORATION OR OTHER ENTITY, DUPLICATED, AND/OR USED, EXCEPT AS OR TO THE EXTENT AS EXPRESSLY AUTHORIZED IN WRITING BY REGAL; THAT IT SHALL BE RETURNED TO OWNER UPON REQUEST; IT MAY BE SUBJECT TO CERTAIN RESTRICTIONS UNDER APPLICABLE EXPORT CONTROL LAWS AND REGULATIONS.

TOLERANCES UNLESS OTHERWISE SPECIFIED

DEC.	INCH	mm	ANGLE
.X	±0.1	[±2.5]	±0.5°
.XX	±0.02	[±0.51]	
.XXX	±0.005	[±0.127]	
.XXXX	±0.0005	[±0.0127]	

REMOVE BURRS & BREAK SHARP EDGES .003/.015 [.076/.381]
CORNER FILLETS .02 [.51]
MACHINED SURFACES 125/ INCH 3.2/ mm
mm SHOWN IN [BRACKETS]

DRAWN BY: JLHESS
DATE: 06–09–2009
APPROVED BY: D.FOX
DATE: 06–09–2009
REFERENCE: –
THIRD ANGLE PROJECTION

Regal Beloit America, Inc.

DESCRIPTION: MODEL–CFHP–56FR OUTLINE
MATERIAL: –
PROCESS/FINISH: –
SIZE: C
DWG NO: B2853
SHEET: 1