Uncontrolled Copy

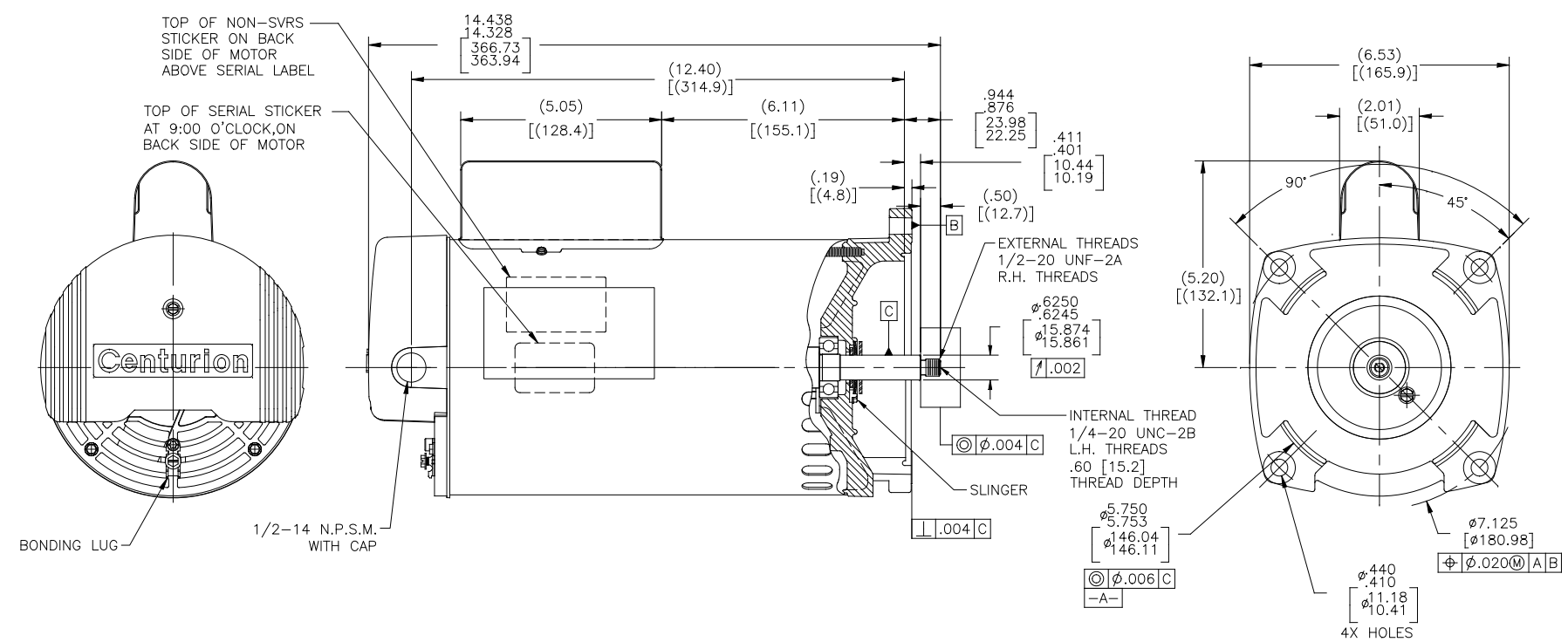

NAMEPLATE DATA	EXTERNAL CONNECTION DIAGRAM	NOTES
MODEL: 196262 CUST PN: B2858 HP: 1.5 SF: 1.5 ROT: CCWPE RPM: 3450 TYPE: CX CODE: K FORM: FRAME: Y 56 Y VOLTS: 230/115 AMPS: – MAX AMPS: – SF AMPS: 10.5/21.0 PH: 1 HZ: 60 INS: F AMB: 50 C DUTY: CONT ENCLOSURE: ODP THERMALLY PROTECTED	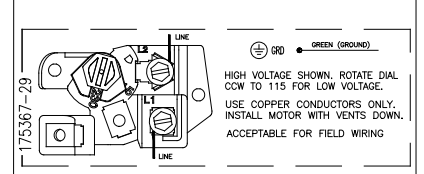 HIGH VOLTAGE SHOWN. ROTATE DIAL CCW TO 115 FOR LOW VOLTAGE. USE COPPER CONDUCTORS ONLY. INSTALL MOTOR WITH VENTS DOWN. ACCEPTABLE FOR FIELD WIRING	1. FOR THREADED SHAFT EXTENSION ECCENTRICITY OF THREADED PORTION OF SHAFT IS HELD WITHIN .004[.10] TOTAL GAGE READING WITH THE INDICATOR ON O.D. OF GROUND RING GAGE AS SHOWN. THE GAGE BEING STATIONARY WITH RESPECT TO THE ROTOR. 2. END PLAY NOT TO EXCEED .010[.25] MEASURED WITH NO THRUST. 3. FINISH PAINT TO BE BLACK. 4. REFERENCE MODEL: B858. 5. CONNECTED FOR 230V. DUAL VOLTAGE MOTOR. SEE CONNECTION DIAGRAM TO CHANGE VOLTS TO 115V.

PERFORMANCE CURVE		APPROVED SAMPLE	
16387811		0601046	
UL COMPONENT		CSA	
FILE#	CCN#	FILE#	GUIDE#
PENDING	PENDING	PENDING	PENDING
CUSTOMER	DISTRIBUTION		

DRAWING REVISION	REVISION BY	DATE
E	IGR	02/07/2017
ECO	APPROVED BY	DATE
ECO-0115017	-	.
ECO DESCRIPTION		
UPDATE REVISION		

COPYRIGHT REGAL BELOIT AMERICA, INC. ALL RIGHTS RESERVED.
PROPRIETARY AND CONFIDENTIAL INFORMATION – THIS DOCUMENT IS THE PROPERTY OF REGAL BELOIT AMERICA, INC. ("OWNER") AND CONTAINS OWNER'S PROPRIETARY INFORMATION. ANY PERSON, CORPORATION OR OTHER FIRM RECEIVING IT IS DEEMED, BY ACCEPTANCE, TO ACKNOWLEDGE THAT IT IS A TRADE SECRET AND THAT IT SHALL NOT BE DISCLOSED TO ANY PERSON, CORPORATION OR OTHER ENTITY, DUPLICATED, USED OR USED, EXCEPT AS EXPRESSLY APPROVED IN WRITING IN ADVANCE BY OWNER. THIS DOCUMENT SHALL BE RETURNED TO OWNER UPON REQUEST. IT MAY BE SUBJECT TO CERTAIN RESTRICTIONS UNDER APPLICABLE EXPORT CONTROL LAWS AND REGULATIONS.

TOLERANCES UNLESS OTHERWISE SPECIFIED

DEC.	INCH	mm	ANGLE
.X	±0.1	[±2.5]	±0.5°
.XX	±0.02	[±0.51]	
.XXX	±0.005	[±0.127]	
.XXXX	±0.0005	[±0.0127]	

REMOVE BURRS & BREAK SHARP EDGES .003/.015 [.076/.381]
CORNER FILLETS .02 [.51]
MACHINED SURFACES 125/ 3.2/ INCH mm
mm SHOWN IN [BRACKETS]

DRAWN BY:	AL
DATE:	11/16/2017
APPROVED BY:	TZ
DATE:	11/16/2011
REFERENCE	-
THIRD ANGLE PROJECTION	

Regal Beloit America, Inc.

DESCRIPTION: MODEL-CFHP-56FR OUTLINE

MATERIAL: - PROCESS/FINISH: -

SIZE: C DWG NO: B2858 SHEET: 1