Uncontrolled Copy

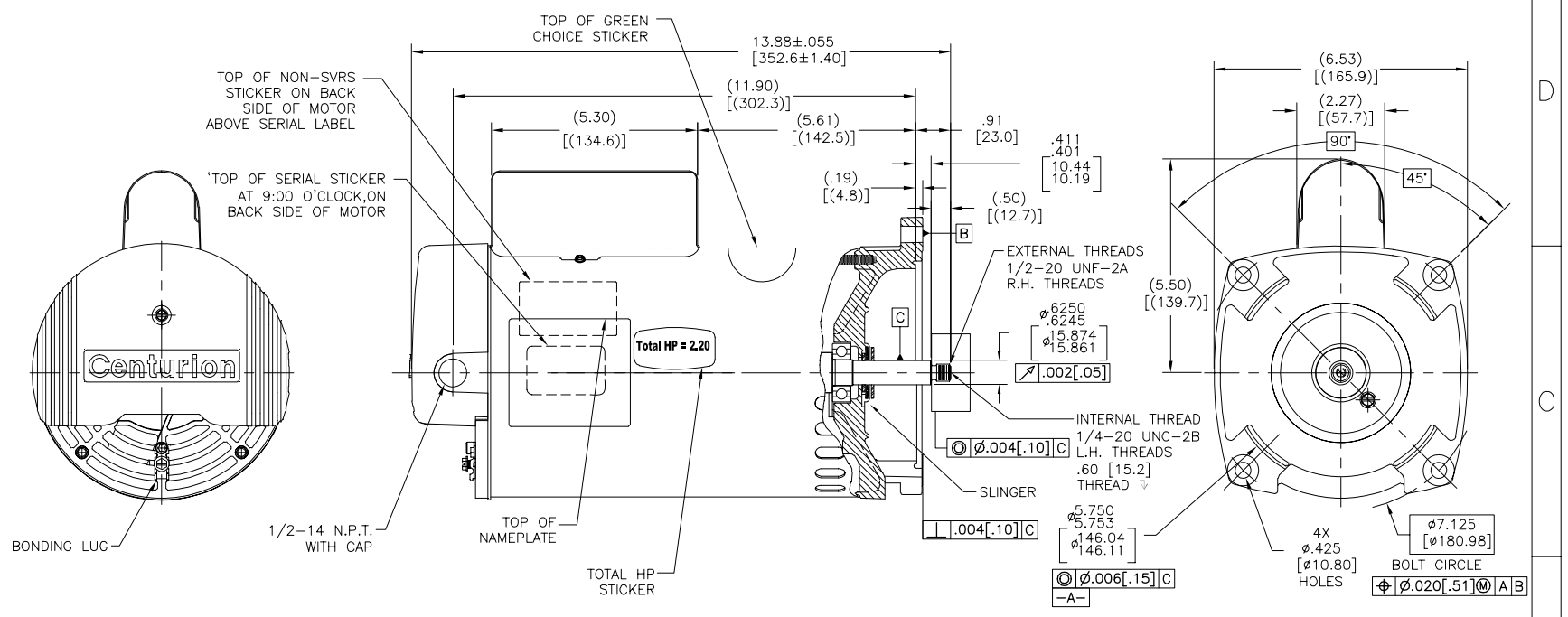

NAMEPLATE DATA	EXTERNAL CONNECTION DIAGRAM	NOTES
MODEL: 196444 CUST PN: B2983 HP: 1.5/.19 SF: 1.47 ROT: CCWPE RPM: 3450/1725 TYPE: CXCP CODE: J FORM: FRAME: Y56Y VOLTS: 230 AMPS: MAX AMPS: SF AMPS: 10.0/1.6 PH: 1 HZ: 60 INS: F AMB: 50°C DUTY: CONT ENCLOSURE: ODP THERMALLY PROTECTED	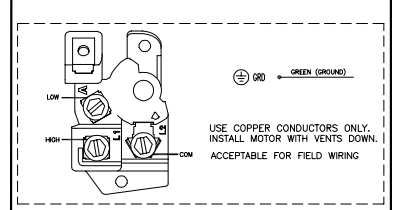	1. FOR THREADED SHAFT EXT. ECCENTRICITY OF THREADED PORTION OF SHAFT IS HELD WITHIN .004[.10] TOTAL GAGE READING WITH THE INDICATOR ON O.D. OF GROUND RING GAGE AS SHOWN. THE GAGE BEING STATIONARY WITH RESPECT TO THE ROTOR. 2. END PLAY NOT TO EXCEED .010[.25] MEASURED WITH NO THRUST. 3. ALL DIMENSIONS SHOWN IN PARENTHESIS ARE REFERENCE DIMENSIONS. 4. FINISH PAINT TO BE BLACK. 5. 2.20 SF HP

PERFORMANCE CURVE		APPROVED SAMPLE	
0116754		0701616	
UL COMPONENT		CSA	
FILE#	CCN#	FILE#	GUIDE#
E44549	PRGY2	LR4642	4211-01
CUSTOMER	DISTRIBUTION		

DRAWING REVISION	REVISION BY	DATE
M	W.CORTEZ	02-18-2014
ECO	APPROVED BY	DATE
ECO-0045203	D.BALDERRAMA	02-18-2014
ECO DESCRIPTION		
SEE ECO		

COPYRIGHT REGAL BELOIT AMERICA, INC. ALL RIGHTS RESERVED.
PROPRIETARY AND CONFIDENTIAL INFORMATION - THIS DOCUMENT IS THE PROPERTY OF REGAL BELOIT AMERICA, INC. ("OWNER") AND CONTAINS OWNER'S PROPRIETARY INFORMATION. ANY PERSONAL, CONFIDENTIAL OR OTHER USE RECEIVING IT IS DEEMED, BY RECEIVING IT, TO AGREE TO KEEP IT CONFIDENTIAL AND NOT TO USE OR DISCLOSE TO ANY PERSON, CORPORATION OR OTHER ENTITY, DUPLICATE, AND/OR USED, EXCEPT AS EXPRESSLY APPROVED IN WRITING IN ADVANCE BY OWNER. THIS DOCUMENT SHALL BE RETURNED TO OWNER UPON REQUEST. IT MAY BE SUBJECT TO CERTAIN RESTRICTIONS UNDER APPLICABLE EXPORT CONTROL LAWS AND REGULATIONS.

TOLERANCES UNLESS OTHERWISE SPECIFIED

DEC.	INCH	mm	ANGLE
.X	±0.1	[±2.5]	±0.5°
.XX	±0.02	[±0.51]	
.XXX	±0.005	[±0.127]	
.XXXX	±0.0005	[±0.0127]	

REMOVE BURRS & BREAK SHARP EDGES .003/.015 [.076/.381]
CORNER FILLETS .02 [.51]
MACHINED SURFACES INCH 32 mm
dim. SHOWN IN [BRACKETS]

DRAWN BY:	Q. HE
DATE:	08-13-2008
APPROVED BY:	T. ZHAO
DATE:	08-13-2008
PROCESS/FINISH	-
THIRD ANGLE PROJECTION	

Regal Beloit America, Inc.

DESCRIPTION: MODEL-PFHP-56FR OUTLINE

MATERIAL: -

SIZE	DWG NO	SHEET
C	B2983	1