Uncontrolled Copy

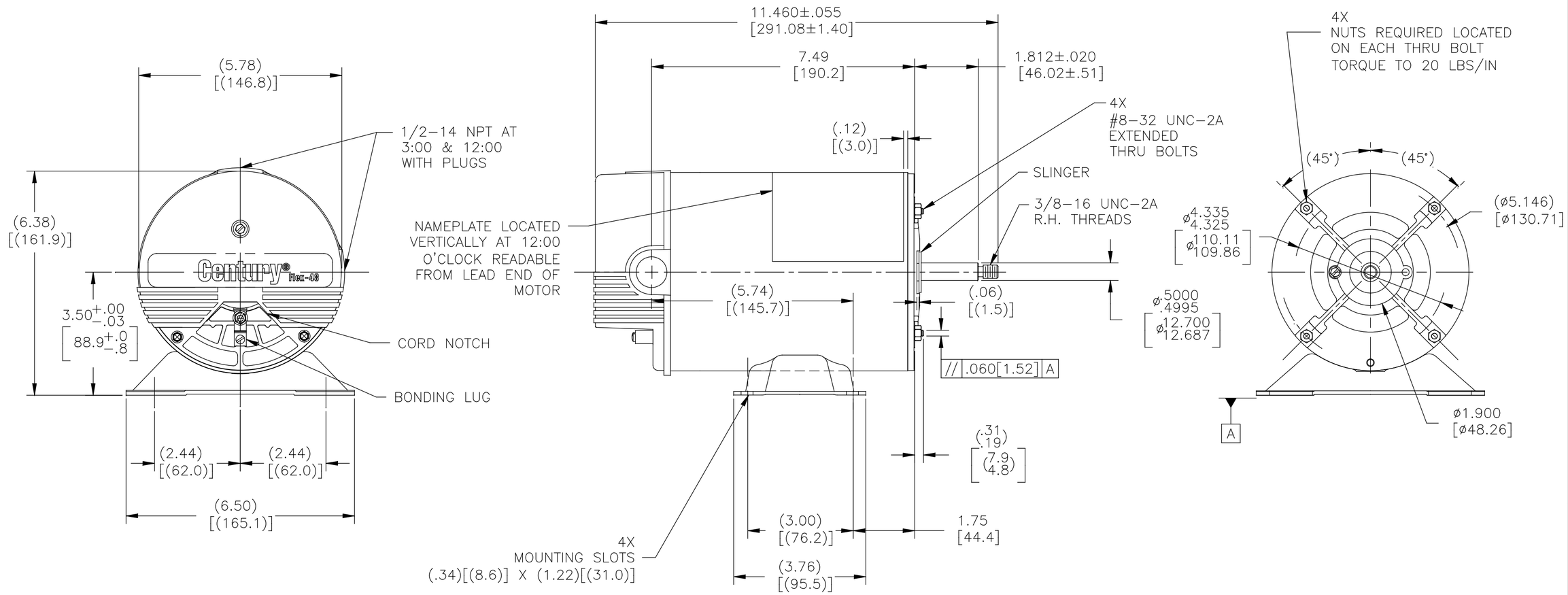

NAMEPLATE DATA

MODEL: S48AA11A01
CUST PN: BN25V1
HP: 1.0 SF: S48K2W25
ROT: CCWPE
RPM: 3450
TYPE: SP CODE: L
FORM: FRAME: 48Y
VOLTS: 115
AMPS:
MAX AMPS:
SF AMPS: 11.8
PH: 1 HZ: 60
INS: B AMB: 50°C
DUTY: CONT
ENCLOSURE: ODP
THERMALLY PROTECTED

EXTERNAL CONNECTION DIAGRAM

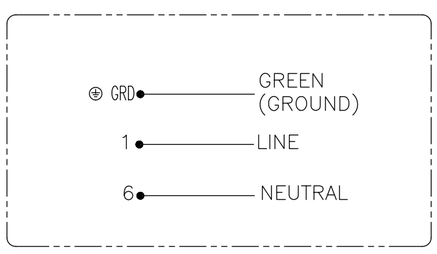

NOTES

1. LEAD END FRAME TO BE ORIENTED TO DRIVE END FRAME TO WITHIN ±2°.
2. ALL DIMENSIONS SHOWN IN PARENTHESIS ARE REFERENCE DIMENSIONS.

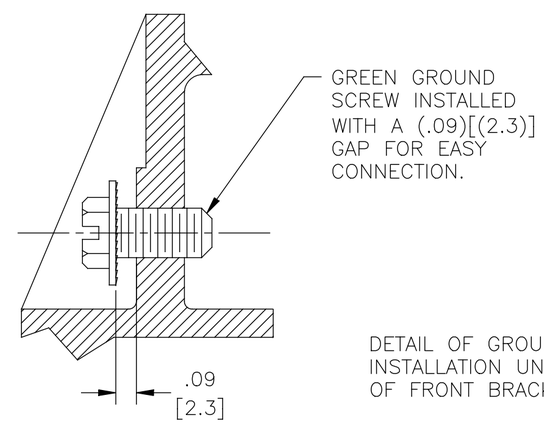

DETAIL OF GROUND SCREW INSTALLATION UNDER COVER OF FRONT BRACKET

PERFORMANCE CURVE		APPROVED SAMPLE	
S48K2W25		0801390	
UL COMPONENT		CSA	
FILE#	CCN#	FILE#	GUIDE#
PENDING	PENDING	PENDING	PENDING
CUSTOMER	DISTRIBUTION		

DRAWING REVISION	REVISION BY	DATE
H	F.JIANG	03–16–2016
ECO	APPROVED BY	DATE
ECO–0091384	Q.HE	03–16–2016
ECO DESCRIPTION		
SEE ECO		

COPYRIGHT REGAL BELOIT AMERICA, INC. ALL RIGHTS RESERVED. PROPRIETARY AND CONFIDENTIAL INFORMATION – THIS DOCUMENT IS THE PROPERTY OF REGAL BELOIT AMERICA, INC. ("OWNER") AND CONTAINS OWNER'S PROPRIETARY INFORMATION. ANY PERSON, CORPORATION OR OTHER FIRM RECEIVING IT IS DEEMED, BY RECEIVING IT, TO AGREE THAT IT, AND/OR ANY PART OF IT, SHALL NOT BE DISCLOSED TO ANY PERSON, CORPORATION OR OTHER ENTITY, DUPLICATED, AND/OR USED, EXCEPT AS EXPRESSLY APPROVED IN WRITING IN ADVANCE BY OWNER. THIS DOCUMENT SHALL BE RETURNED TO OWNER UPON REQUEST. IT MAY BE SUBJECT TO CERTAIN RESTRICTIONS UNDER APPLICABLE EXPORT CONTROL LAWS AND REGULATIONS.

TOLERANCES UNLESS OTHERWISE SPECIFIED

DEC.	INCH	mm	ANGLE
.X	±0.1	[±2.5]	±0.5°
.XX	±0.02	[±0.51]	
.XXX	±0.005	[±0.127]	
.XXXX	±0.0005	[±0.0127]	

REMOVE BURRS & BREAK SHARP EDGES .003/.015 [.076/.381]
CORNER FILLETS .02 [.51]
MACHINED SURFACES INCH 125 mm 3.2
mm SHOWN IN [BRACKETS]

DRAWN BY: J.HENRY
DATE: 01–29–2009
APPROVED BY: .
DATE: .
REFERENCE .
THIRD ANGLE PROJECTION

Regal Beloit America, Inc.

DESCRIPTION
MODEL–PFHP–48FR
OUTLINE

MATERIAL . PROCESS/FINISH .

SIZE C DWG NO BN25V1 SHEET 1