Uncontrolled Copy

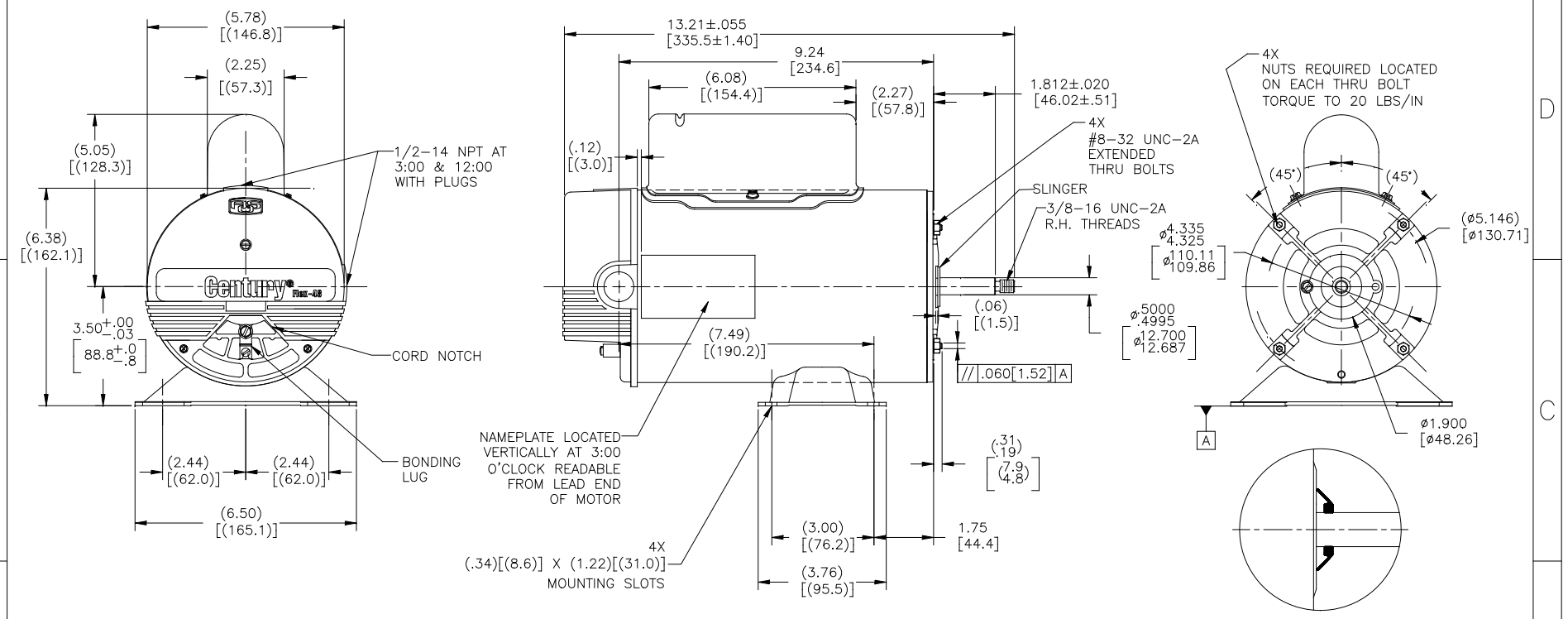

SLINGER FLUSH AGAINST BRACKET HUB WITH OUTSIDE DIAMETER TOWARD BRACKET.

NAMEPLATE DATA	EXTERNAL CONNECTION DIAGRAM	NOTES
MODEL: F48AD44A01 CUST PN: BN34V1 HP: 1.5/.188 SF: 1.0 ROT: CCWPE RPM: 3450/1725 TYPE: C/F CODE: F FORM: FRAME: 48Y VOLTS: 230 AMPS: 6.5/2.5 MAX AMPS: SF AMPS: PH: 1 HZ: 60 INS: B AMB: 40 DUTY: CONT ENCLOSURE: ODP THERMALLY PROTECTED	⏚ GRD — GREEN (GROUND) 1 — HIGH SPEED 5 — COMMON 6 — LOW SPEED	1. LEAD END FRAME TO BE ORIENTED TO DRIVE END FRAME TO WITHIN ±2° 2. ALL DIMENSIONS SHOWN IN PARENTHESIS ARE REFERENCE DIMENSIONS.

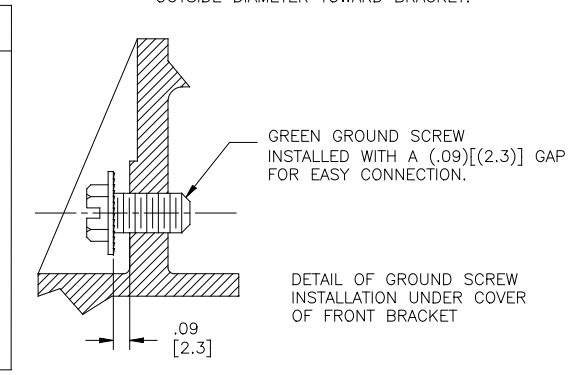

DETAIL OF GROUND SCREW INSTALLATION UNDER COVER OF FRONT BRACKET

PERFORMANCE CURVE		APPROVED SAMPLE	
F48M2W1		0802264BP2	
UL COMPONENT		CSA	
FILE#	CCN#	FILE#	GUIDE#
PENDING	PENDING	PENDING	PENDING
CUSTOMER	DISTRIBUTION		

DRAWING REVISION	REVISION BY	DATE
F	J.MORENO	02−25−2016
ECO	APPROVED BY	DATE
0091384	J.MORENO	02−25−2016

ECO DESCRIPTION
SEE ECO

COPYRIGHT REGAL BELOIT AMERICA, INC. ALL RIGHTS RESERVED.
PROPRIETARY AND CONFIDENTIAL INFORMATION − THIS DOCUMENT IS THE PROPERTY OF REGAL BELOIT AMERICA, INC. ("OWNER") AND CONTAINS OWNER'S PROPRIETARY INFORMATION AND TRADE SECRETS. HANDLING, USE OR DISCLOSURE OF THE DRAWING, BY RECEIVING IT, TO AGREE THAT IT, AND/OR ANY PART OF IT, SHALL NOT BE DISCLOSED TO ANY PERSON, CORPORATION OR OTHER ENTITY, DUPLICATED, AND/OR USED, EXCEPT AS EXPRESSLY APPROVED IN WRITING IN ADVANCE BY OWNER. THIS DOCUMENT SHALL BE RETURNED TO OWNER UPON REQUEST. IT MAY BE SUBJECT TO CERTAIN RESTRICTIONS UNDER APPLICABLE EXPORT CONTROL LAWS AND REGULATIONS.

TOLERANCES UNLESS OTHERWISE SPECIFIED

DEC.	INCH	mm	ANGLE
.X	±0.1	[±2.5]	±0.5°
.XX	±0.02	[±0.51]	
.XXX	±0.005	[±0.127]	
.XXXX	±0.0005	[±0.0127]	

REMOVE BURRS & BREAK SHARP EDGES .003/.015 [.076/.381]
CORNER FILLETS .02 [.51]
MACHINED SURFACES 125/ 3.2 INCH ✓ mm
mm SHOWN IN [BRACKETS]

DRAWN BY: JZ
DATE: 11−29−2010
APPROVED BY: SH
DATE: 11−29−2010
REFERENCE
THIRD ANGLE PROJECTION

Regal Beloit America, Inc.

DESCRIPTION
MODEL−PFHP−48FR
OUTLINE

MATERIAL - PROCESS/FINISH -

SIZE	DWG NO	SHEET
C	BN34V1	1