Uncontrolled Copy

REV	ECO	REV BY	DATE	APPD	DATE
C	0025356	J.M.Ramirez	04-12-2012	R.Rascon	04-12-2012

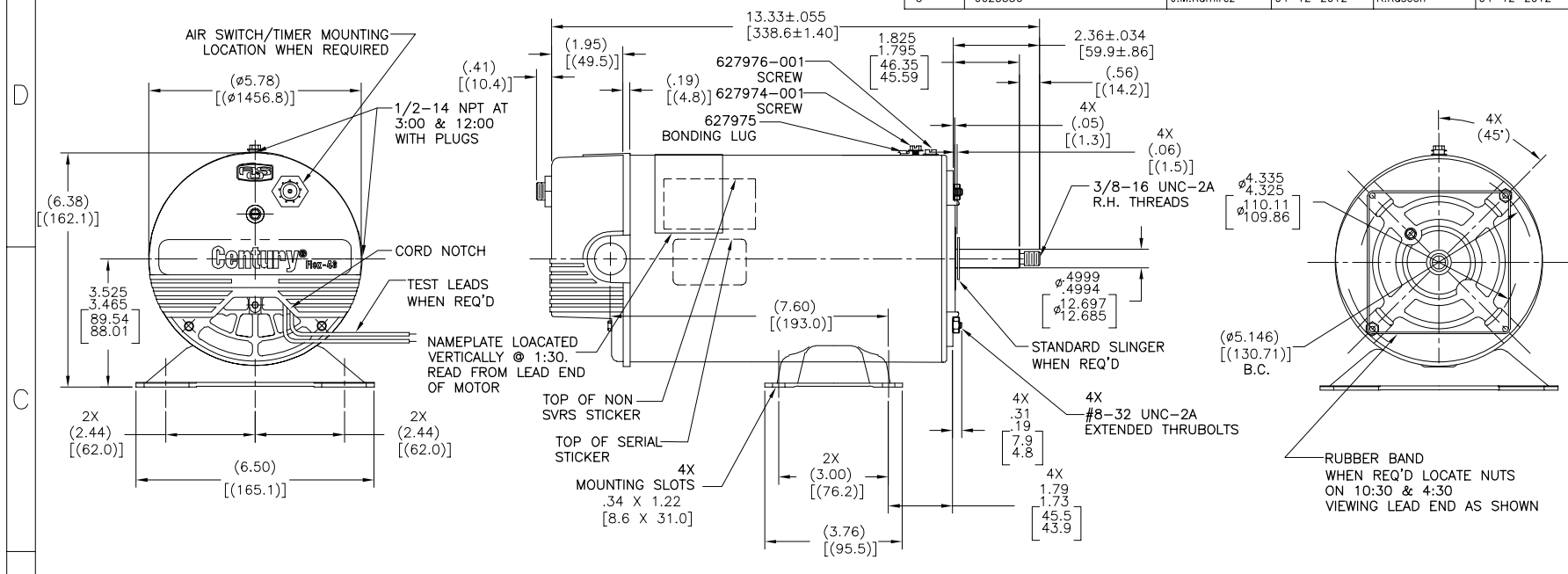

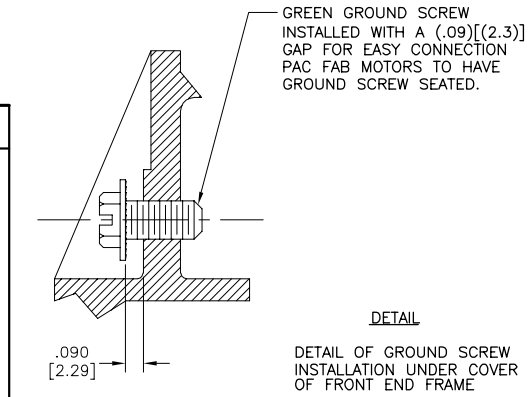

DETAIL

DETAIL OF GROUND SCREW INSTALLATION UNDER COVER OF FRONT END FRAME

NAMEPLATE DATA

MODEL: 186887
CUST PN: BN40SS
HP: 2.0 SF: 1.0
ROT: CCWPE
RPM: 3450
TYPE: CS CODE: G
FORM: PHM FRAME: X-48-Y
VOLTS: 230/115
AMPS: 10.0/20.0
MAX AMPS: ----
SF AMPS: -
PH: 1 HZ: 60
INS: B AMB: 40
DUTY: CONT
ENCLOSURE: ODP
THERMALLY PROTECTED

EXTERNAL CONNECTION DIAGRAM

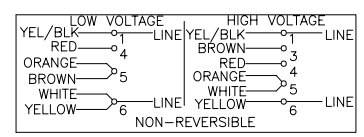

NOTES

1. THE BOTTOM TWO THRUBOLTS IN SHAFT END FRAME ARE TO BE PARALELL TO BASE WITHIN .060[1.52].
2. LEAD END FRAME TO BE ORIENTED TO DRIVE END FRAME TO WITHIN ± 2°.
3. TORQUE @ 3450 RPM (25°) 48.8 OZ-FT.

PERFORMANCE CURVE		APPROVED SAMPLE	
18025811		-------	
UL COMPONENT		CSA	
FILE#	CCN#	FILE#	GUIDE#
E14663	XEWR2	LR4642	4211-01
CUSTOMER	DISTRIBUTION		

GEOMETRIC CHARACTERISTICS & SYMBOLS
- FLATNESS
- STRAIGHTNESS
- ANGULARITY
- PERPENDICULARITY (SQUARENESS)
- PARALLELISM
- ROUNDNESS (CIRCULARITY)
- CYLINDRICITY
- PROFILE OF ANY SURFACE
- PROFILE OF ANY LINE
- RUNOUT
- TRUE POSITION
- CONCENTRICITY
- SYMMETRY

ASME Y14.5M 1994

UNLESS OTHERWISE SPECIFIED
DIM. TOLERANCES ARE AS FOLLOWS:
X XX XXX XXXX
INCH ±.1 ±.02 ±.005 ±.0005
mm ±0.5 ±0.13 ±0.013
ANG. ±.50 DEG
REMOVE BURRS & BREAK SHARP EDGES:
INCH .003-.015 mm 0.1-0.4
CORNER FILLETS TO:
INCH .020 mm 0.5
MACHINE SURFACES:
INCH 125 mm 3.2
METRIC DIMS. SHOWN IN [BRACKETS]

DR BY: TZ	10-20-2010	REGAL-BELOIT CORPORATION
APPD: BS	10-20-2010	DESCRIPTION: OUTLINE
THIRD ANGLE PROJECTION	EDS DATE 11-11-2011 / FORMAT REV G	
		SIZE C / DWG NO BN40SS
		SCALE NONE / SHEET 1

CONFIDENTIAL: THIS DRAWING AND ITS INFORMATION ARE THE EXCLUSIVE AND CONFIDENTIAL PROPERTY OF REGAL-BELOIT CORPORATION AND ARE NOT TO BE DISCLOSED, DUPLICATED, DISTRIBUTED OR OTHERWISE USED WITHOUT THE WRITTEN CONSENT OF REGAL-BELOIT CORPORATION. -ALL RIGHTS RESERVED.

Uncontrolled Copy

REVISION:	ECO	REVISADO POR:	FECHA:	APROBADO POR:	FECHA:
C	0025356	J.M.Ramirez	04-12-2012	R.Rascon	04-12-2012

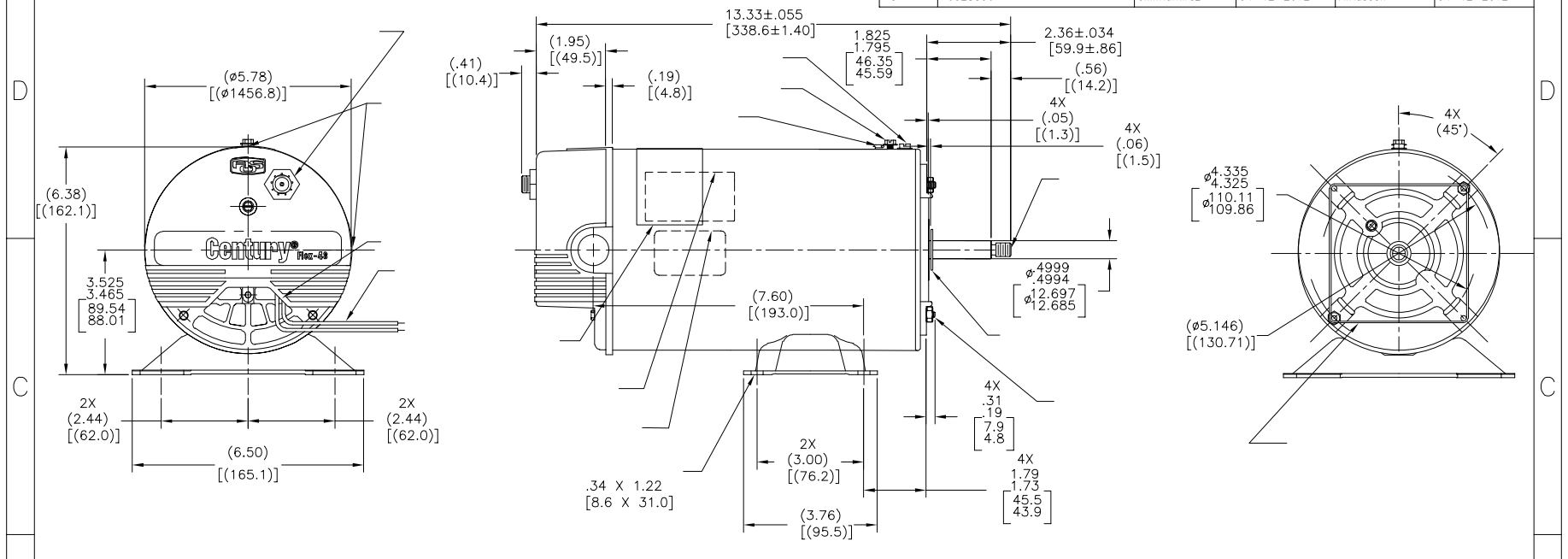

NAMEPLATE DATA	EXTERNAL CONNECTION DIAGRAM	NOTES
MODEL: 186887 CUST PN: BN40SS HP: 2.0 SF: 1.0 ROT: CCWPE RPM: 3450 TYPE: CS CODE: G FORM: PHM FRAME: X-48-Y VOLTS: 230/115 AMPS: 10.0/20.0 MAX AMPS: ---- SF AMPS: - PH: 1 HZ: 60 INS: B AMB: 40 DUTY: CONT ENCLOSURE: ODP THERMALLY PROTECTED	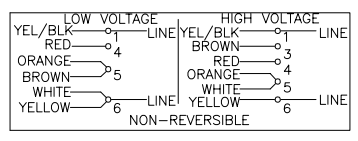	

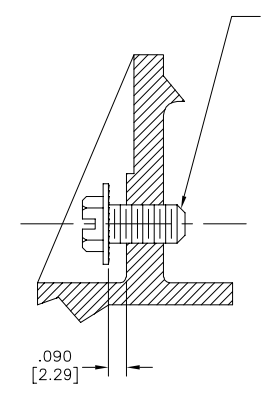

PERFORMANCE CURVE		APPROVED SAMPLE	
18025811		--------	
UL COMPONENT		CSA	
FILE#	CCN#	FILE#	GUIDE#
E14663	XEWR2	LR4642	4211-01
CUSTOMER	DISTRIBUTION		

CARACTERISTICAS DE GEOMETRIA Y SIMBOLOS
- PLANICIDAD
- RECTITUD
- ANGULARIDAD
- PERPENDICULARIDAD (A ESCUADRA)
- PARALELISMO
- REDONDEZ (CIRCULARIDAD)
- CILINDRICIDAD
- PERFIL DE CUALQUIER SUPERFICIE
- PERFIL DE CUALQUIER LINEA
- VARIACION
- POSICION REAL
- CONCENTRICIDAD
- SIMETRIA

ASME Y14.5M 1994

A MENOS QUE SE ESPECIFIQUE DE OTRA MANERA, LAS TOLERANCIAS DE LAS DIMS. SON LAS SIGUIENTES:

	X	XX	XXX	XXXX
PULG	±.1	±.02	±.005	±.0005
mm	±0.5	±0.13	±0.013	

ANG. ±.50 GRADOS
ELIMINAR REBABAS Y ORILLAS FILOSAS DEL BORDE.
PULG .003-.015 mm 0.1-0.4
FILETEAR ESQUINA: PULG .020 mm 0.5
MAQUINAR SUPERFICIES
PULG 125 mm 3.2
DIMS METRICAS MOSTRADAS [PARENTESIS]

DIBUJADO POR: TZ	10-20-2010	REGAL-BELOIT CORPORATION
APROBADO POR: BS	10-20-2010	DESCRIPCION: OUTLINE
TERCER ANGULO DE PROYECCION	FECHA EDS: 11-11-2011 REV. FORMATO: G	
TAMAÑO: C	NUMERO DE DIBUJO: BN40SS	
ESCALA: NONE		HOJA: 1

CONFIDENCIAL: ESTE DIBUJO Y SU INFORMACION SON PROPIEDAD DE USO EXCLUSIVO Y CONFIDENCIAL DE REGAL-BELOIT CORPORATION. Y NO DEBERAN SER REVELADOS, DUPLICADOS, DISTRIBUIDOS O USARSE DE OTRA MANERA SIN EL CONSENTIMIENTO ESCRITO DE REGAL-BELOIT CORPORATION. -TODOS LOS DERECHOS RESERVADOS.

Uncontrolled Copy

版本	ECO	编制	日期	批准	日期
C	0025356	J.M.Ramirez	04-12-2012	R.Rascon	04-12-2012

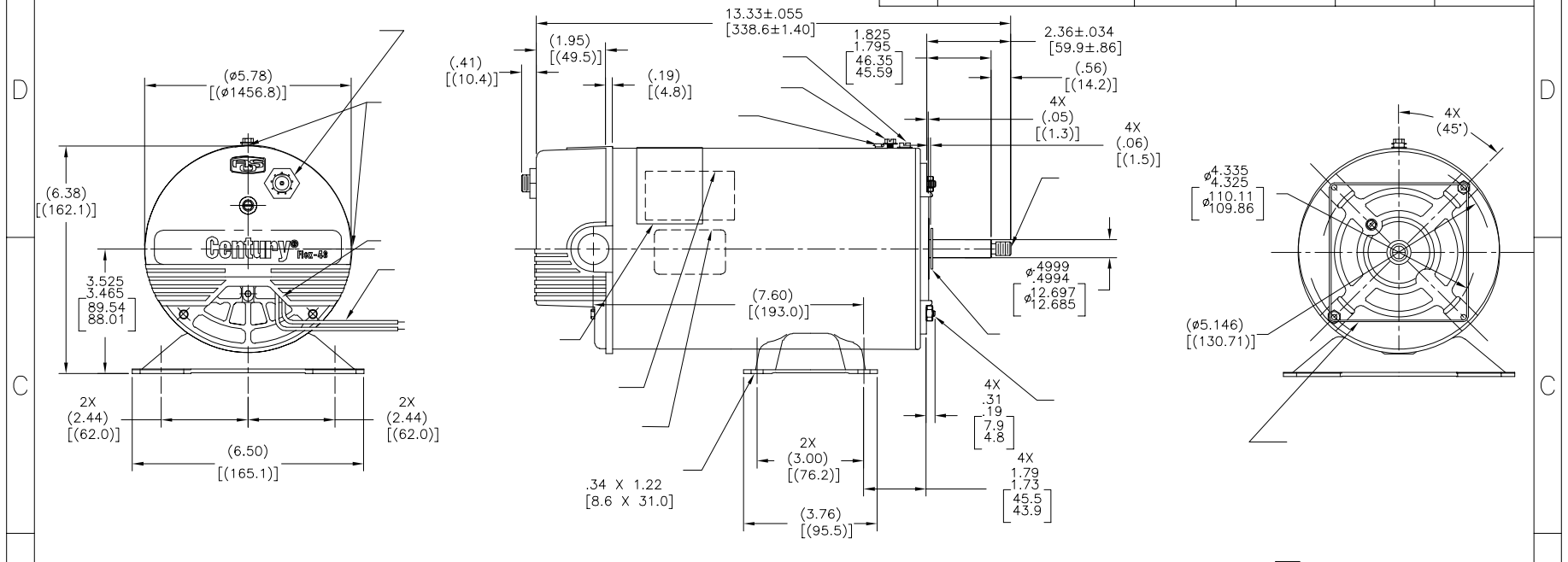

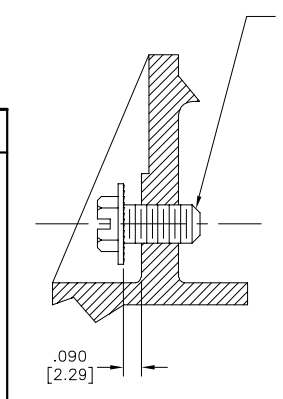

NAMEPLATE DATA	EXTERNAL CONNECTION DIAGRAM	NOTES
MODEL: 186887 CUST PN: BN40SS HP: 2.0 SF: 1.0 ROT: CCWPE RPM: 3450 TYPE: CS CODE: G FORM: PHM FRAME: X-48-Y VOLTS: 230/115 AMPS: 10.0/20.0 MAX AMPS: ---- SF AMPS: - PH: 1 HZ: 60 INS: B AMB: 40 DUTY: CONT ENCLOSURE: ODP THERMALLY PROTECTED	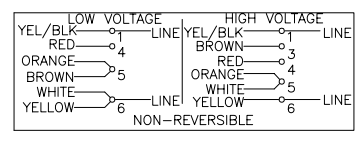	

PERFORMANCE CURVE		APPROVED SAMPLE	
18025811		-------	
UL COMPONENT		CSA	
FILE#	CCN#	FILE#	GUIDE#
E14663	XEWR2	LR4642	4211-01
CUSTOMER	DISTRIBUTION		

形位公差
平面度
直线度
倾斜度
垂直度
平行度
圆度
圆柱度
面轮廓度
线轮廓度
圆跳动
位置度
同轴度
对称度

ASME Y14.5M 1994

除另有注明
尺寸公差如下:

	X	XX	XXX	XXXX
英寸	±.1	±.02	±.005	±.0005
毫米	±0.5	±0.13	±0.013	

角度 ± 50 度
清理毛刺和尖棱
英寸 .003-.015 毫米 0.1-0.4
内圆角
英寸 .020 毫米 0.5
表面粗糙度
英制 125 米制 3.2
米制尺寸显示在[ ]

绘图:	TZ	10-20-2010
批准:	BS	10-20-2010
第三角投影		图纸格式发布日期 11-11-2011
		图纸格式版本 G

机密: 本图纸及相关信息所有权归REGAL-BELOIT CORPORATION。未经REGAL-BELOIT CORPORATION书面授权，不得泄露、复制、传播或作其他用途。一版权所有

REGAL-BELOIT CORPORATION

名称: OUTLINE

图幅: C 图号: BN40SS

比例: NONE 页号: 1