Uncontrolled Copy

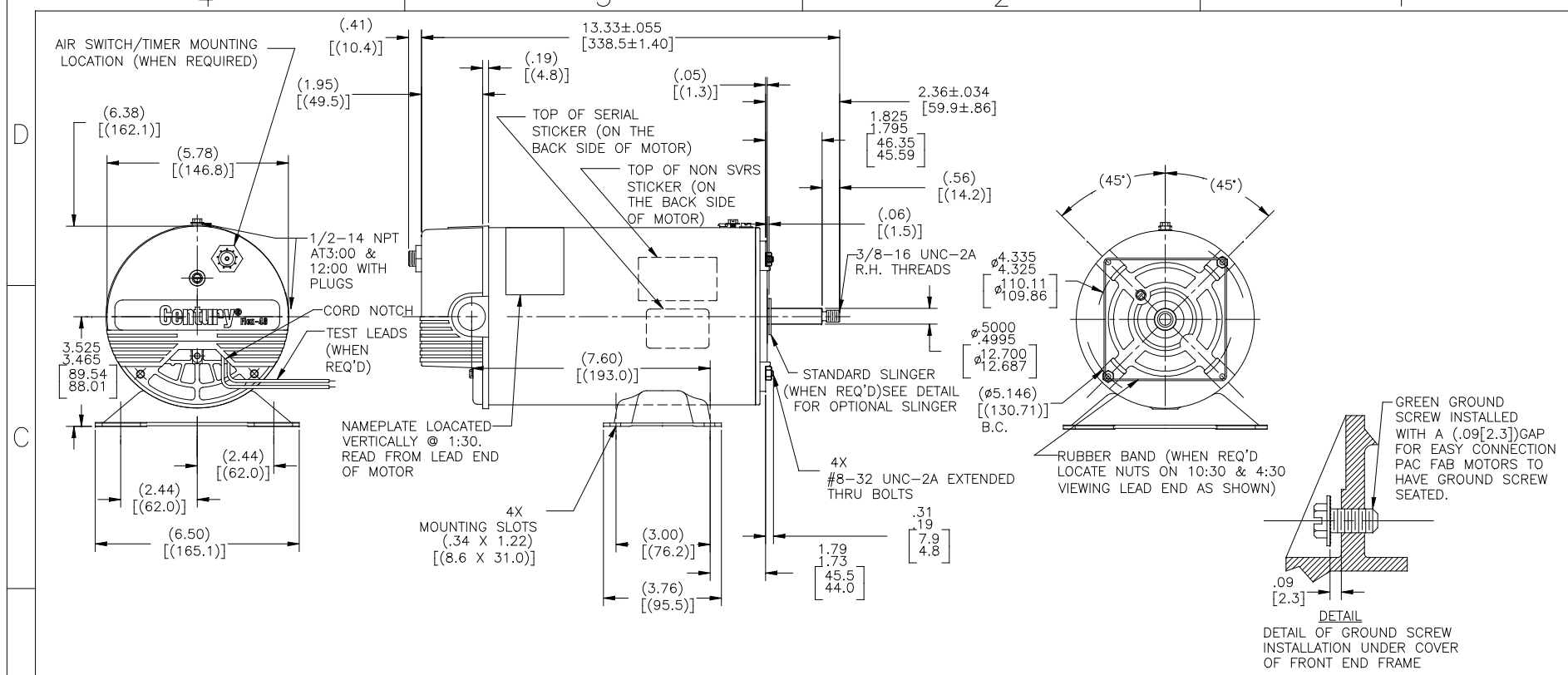

NAMEPLATE DATA

MODEL: 182477
CUST PN: BN51
HP: -- SF: --
ROT: CCWPE
RPM: 3450/1725
TYPE: CSM CODE: A
FORM: PHM FRAME: X48Y
VOLTS: 230
AMPS: 10.5/2.6
MAX AMPS: --
SF AMPS: --
PH: 1 HZ: 60
INS: F AMB: 40°C
DUTY: CONT
ENCLOSURE: ODP
THERMALLY–PROTECTED

EXTERNAL CONNECTION DIAGRAM

178887–24

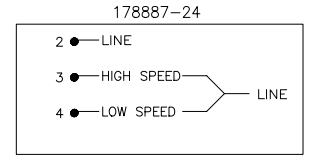

NOTES

1. THE BOTTOM TWO THRU BOLTS IN SHAFT END END FRAME ARE TO BE PARALELL TO BASE WITHIN (.060)[(1.52)].
2. LEAD END FRAME TO BE ORIENTED TO DRIVE END FRAME TO WITHIN ±2°.
3. ALL DIMENSIONS SHOWN IN PARENTHESIS ARE REFERENCE DIMENSIONS.

PERFORMANCE CURVE		APPROVED SAMPLE	
17176511		--	
UL COMPONENT		CSA	
FILE#	CCN#	FILE#	GUIDE#
PENDING	PENDING	PENDING	PENDING
CUSTOMER		DISTRIBUTION	

DRAWING REVISION	REVISION BY	DATE
J	F.JIANG	03–16–2016
ECO	APPROVED BY	DATE
ECO–0091384	Q.HE	03–16–2016
ECO DESCRIPTION		
SEE ECO		

COPYRIGHT REGAL BELOIT AMERICA, INC. ALL RIGHTS RESERVED. PROPRIETARY AND CONFIDENTIAL INFORMATION – THIS DOCUMENT IS THE PROPERTY OF REGAL BELOIT AMERICA, INC.("OWNER") AND CONTAINS OWNER'S PROPRIETARY INFORMATION AND TRADE SECRETS. HOLDER OF THIS DOCUMENT, BY OPENING IT, BY RECEIVING IT, TO AGREE THAT IT, AND/OR ANY PART OF IT, SHALL NOT BE DISCLOSED TO ANY PERSON, CORPORATION OR OTHER ENTITY, DUPLICATED, AND/OR USED, EXCEPT AS EXPRESSLY APPROVED IN WRITING IN ADVANCE BY OWNER. THIS DOCUMENT SHALL BE RETURNED TO OWNER UPON REQUEST. IT MAY BE SUBJECT TO CERTAIN RESTRICTIONS UNDER APPLICABLE EXPORT CONTROL LAWS AND REGULATIONS.

TOLERANCES UNLESS OTHERWISE SPECIFIED

DEC.	INCH	mm	ANGLE
.X	±0.1	[±2.5]	±0.5°
.XX	±0.02	[±0.51]	
.XXX	±0.005	[±0.127]	
.XXXX	±0.0005	[±0.0127]	

REMOVE BURRS & BREAK SHARP EDGES .003/.015 [.076/.381]
CORNER FILLETS .02 [.51]
MACHINED SURFACES 125/ INCH 3.2/ mm
mm SHOWN IN [BRACKETS]

DRAWN BY: MH
DATE: 07–03–2009
APPROVED BY: HY
DATE: 07–03–2009
REFERENCE

Regal Beloit America, Inc.

DESCRIPTION: OUTLINE

MATERIAL: - PROCESS/FINISH: -

THIRD ANGLE PROJECTION

SIZE	DWG NO	SHEET
C	BN51	1