Uncontrolled Copy

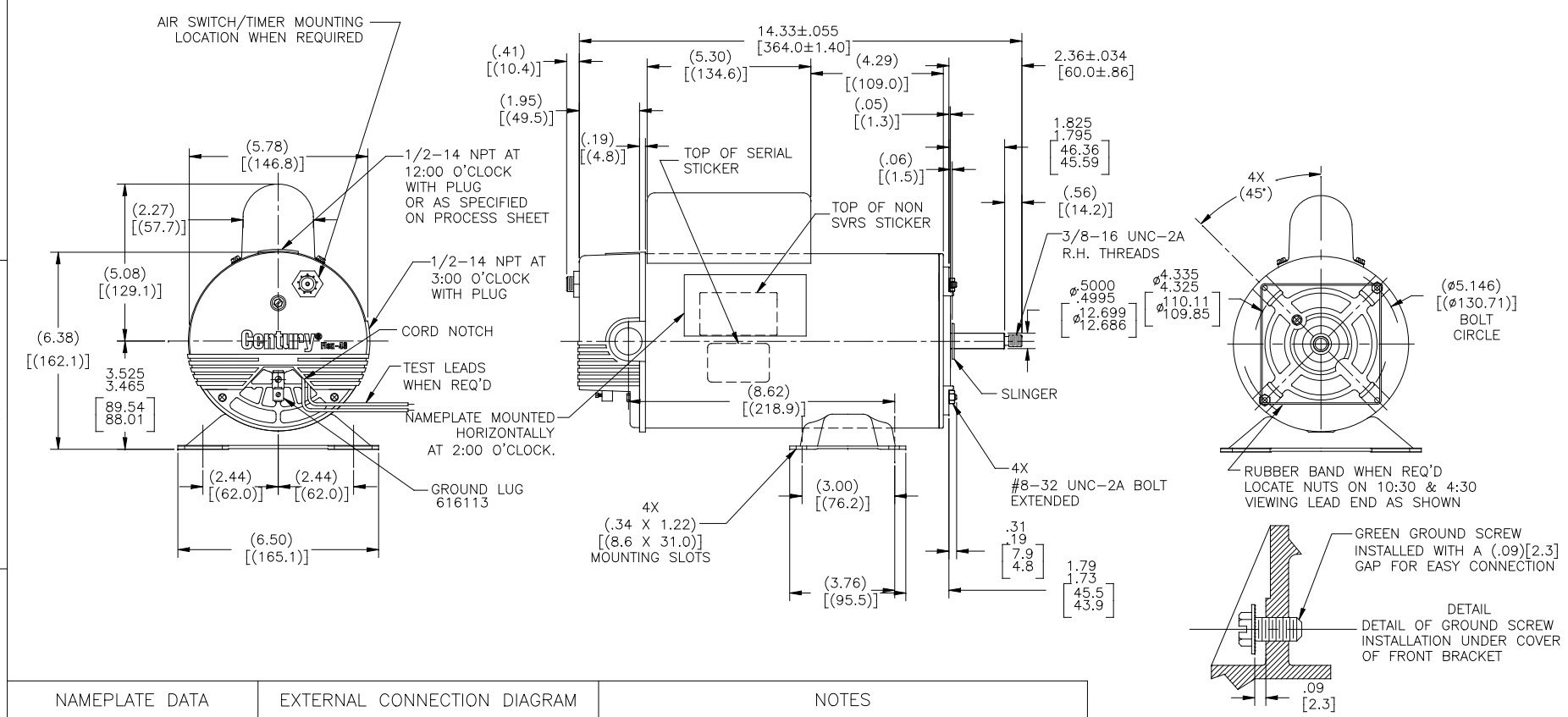

NAMEPLATE DATA	EXTERNAL CONNECTION DIAGRAM	NOTES
MODEL: 184821 CUST PN: BN62 HP: –– SF: –– ROT: CCWPE RPM: 3450/1725 TYPE: CXSM CODE: A FORM: FRAME: Y 48Y VOLTS: 230 AMPS: 12.0/3.5 MAX AMPS: –– SF AMPS: – PH: 1 HZ: 60 INS: B AMB: 50 DUTY: CONT ENCLOSURE: ODP THERMALLY PROTECTED	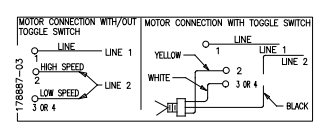	1. THE BOTTOM TWO THRU BOLTS IN SHAFT END BRACKET ARE TO BE PARALELL TO BASE WITHIN (.060)[(1.52)]. 2. LEAD END FRAME TO BE ORIENTED TO DRIVE END FRAME TO WITHIN ±2°.

PERFORMANCE CURVE		APPROVED SAMPLE	
18071711			
UL COMPONENT		CSA	
FILE#	CCN#	FILE#	GUIDE#
E44549	PRGY2	LR4642	4211–01
CUSTOMER		DISTRIBUTION	

DRAWING REVISION	REVISION BY	DATE
L	F.JIANG	03–16–2016
ECO	APPROVED BY	DATE
ECO–0091384	Q.HE	03–16–2016
ECO DESCRIPTION		
SEE ECO		

COPYRIGHT REGAL BELOIT AMERICA, INC. ALL RIGHTS RESERVED.
PROPRIETARY AND CONFIDENTIAL INFORMATION – THIS DOCUMENT IS THE PROPERTY OF REGAL BELOIT AMERICA, INC. AND CONTAINS PROPRIETARY AND CONFIDENTIAL INFORMATION. ANY PERSON, CORPORATION OR OTHER FIRM RECEIVING IT IS DEEMED, BY RECEIVING IT, TO AGREE THAT IT, AND/OR ANY PART OF IT, SHALL NOT BE DISCLOSED TO ANY PERSON, CORPORATION OR OTHER ENTITY, DUPLICATED, AND/OR USED, EXCEPT AS EXPRESSLY APPROVED IN WRITING IN ADVANCE BY OWNER. THIS DOCUMENT SHALL BE RETURNED TO OWNER UPON REQUEST. IT MAY BE SUBJECT TO CERTAIN RESTRICTIONS UNDER APPLICABLE EXPORT CONTROL LAWS AND REGULATIONS.

TOLERANCES UNLESS OTHERWISE SPECIFIED

DEC.	INCH	mm	ANGLE
.X	±0.1	[±2.5]	±0.5°
.XX	±0.02	[±0.51]	
.XXX	±0.005	[±0.127]	
.XXXX	±0.0005	[±0.0127]	

REMOVE BURRS & BREAK SHARP EDGES .003/.015 [.076/.381]
CORNER FILLETS .02 [.51]
MACHINED SURFACES 125/ 3.2/ INCH mm
mm SHOWN IN [BRACKETS]

DRAWN BY: JH
DATE: 07–16–2009
APPROVED BY: SH
DATE: 07–16–2009
REFERENCE

Regal Beloit America, Inc.

DESCRIPTION: OUTLINE

MATERIAL: . PROCESS/FINISH: .

THIRD ANGLE PROJECTION

SIZE: C DWG NO: BN62 SHEET: 1