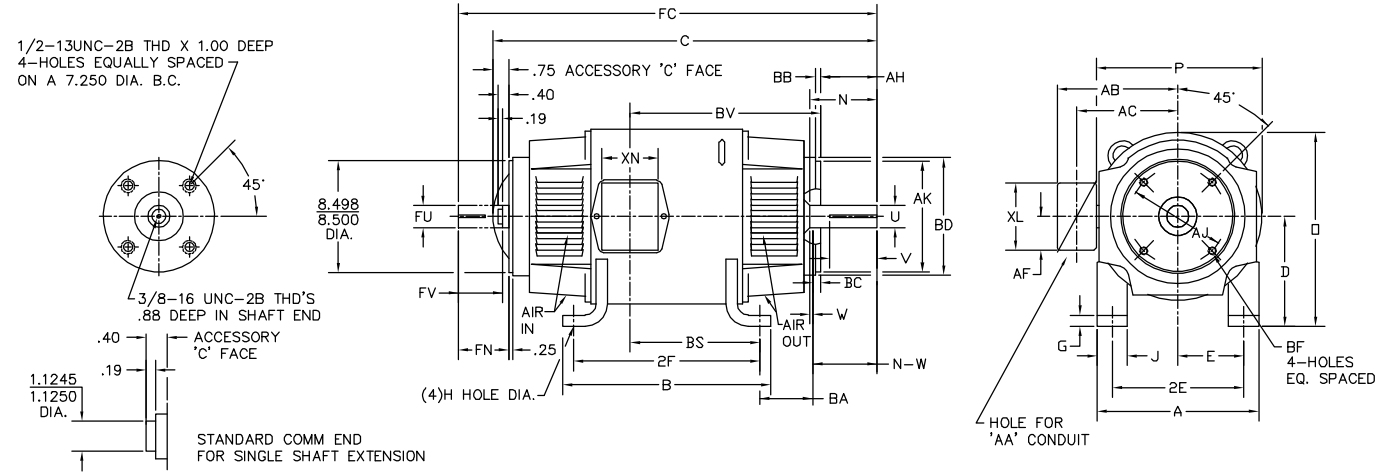

	FOOT MOUNTING						D.E. SHAFT EXTENSION												DRIVE KEY		ACC SHAFT EXTENSION			ACC KEY	
FRAME	BA	E	2F	G	H	J	AH	AJ	AK	BB MIN	BC	BD	BF THREAD	BF DEEP	N	N-W	U	V	W	KEY-SQ.	KEY-LONG	FN	FU	FV	KEY-SQ.	KEY-LONG
218ATC	3.50	4.25	10.00	.50	.406	2.00	2.50	7.250	8.500[2]	.24	.25	8.75	1/2-13	1.00	3.00	2.75	1.375	2.50[4]	.25	.312	1.75	2.44	1.125	2.19	.250	2.25
219ATC	3.50	4.25	11.00	.50	.406	2.00	2.50	7.250	8.500[2]	.24	.25	8.75	1/2-13	1.00	3.00	2.75	1.375	2.50[4]	.25	.312	1.75	2.44	1.125	2.19	.250	2.25
2110ATC	3.50	4.25	12.50	.50	.406	2.00	2.50	7.250	8.500[2]	.24	.25	8.75	1/2-13	1.00	3.00	2.75	1.375	2.50[4]	.25	.312	1.75	2.44	1.125	2.19	.250	2.25
258ATC	4.25	5.00	12.50	.69	.531	2.25	3.00	7.250	8.500[2]	.27	.25	8.75	1/2-13	.97	3.44	3.25	1.625	3.00[4]	.19	.375	2.31	3.33	1.375	3.08	.312	3.00
259ATC	4.25	5.00	14.00	.69	.531	2.25	3.00	7.250	8.500[2]	.27	.25	8.75	1/2-13	.97	3.44	3.25	1.625	3.00[4]	.19	.375	2.31	3.33	1.375	3.08	.312	3.00
2510ATC	4.25	5.00	16.00	.69	.531	2.25	3.00	7.250	8.500[2]	.27	.25	8.75	1/2-13	.97	3.44	3.25	1.625	3.00[4]	.19	.375	2.31	3.33	1.375	3.08	.312	3.00
2513ATC	4.25	5.00	22.00	.69	.531	2.25	3.00	7.250	8.500[2]	.27	.25	8.75	1/2-13	.97	3.44	3.25	1.625	3.00[4]	.19	.375	2.31	3.33	1.375	3.08	.312	3.00

	FRAME							CONDUIT BOX								ARM APPROX. WK[2] LBS.FT.[2]	APPROXIMATE WEIGHT
FRAME	A	B	C	FC	D	O	P	AA	AB	AC	AF	BS	BV	XL	XN		
218ATC	10.38	11.00	24.25	25.93	5.25[3]	10.47	10.44	3/4-1	7.91	6.44	2.44	8.38	12.13	3.81	3.12	1.35	245
219ATC	10.38	12.00	25.25	26.93	5.25[3]	10.47	10.44	3/4-1	7.91	6.44	2.44	9.38	13.13	3.81	3.12	1.49	263
2110ATC	10.38	13.50	26.75	28.43	5.25[3]	10.47	10.44	3/4-1	7.91	6.44	2.44	10.88	14.63	3.81	3.12	1.71	291
258ATC	12.38	14.00	27.25	29.84	6.25[3]	12.47	12.44	1 1/4	9.35	7.72	2.94	9.75	14.25	4.94	4.00	2.91	377
259ATC	12.38	15.50	28.75	31.34	6.25[3]	12.47	12.44	1 1/4	9.35	7.72	2.94	11.25	15.75	4.94	4.00	3.31	422
2510ATC	12.38	17.56	30.75	33.34	6.25[3]	12.47	12.44	1 1/4	9.35	7.72	2.94	13.25	17.75	4.94	4.00	3.80	482
2513ATC	12.38	23.50	36.75	39.34	6.25[3]	12.47	12.44	1 1/4	9.35	7.72	2.94	19.25	19.75	4.94	4.00	5.27	531

FOR F1 OR F2 CONDUIT BOX
LOCATION SEE SALES ORDER

1) SHAFT DIAMETERS TO 1.500 TOLERANCE +000 -.0005
SHAFT DIAMETERS ABOVE 1.500 TOLERANCE +.000 -.0010
SHAFT DIAMETERS TO 1.625 RUNOUT .002 T.I.R. MAX.
SHAFT DIAMETERS ABOVE 1.625 RUNOUT .003 T.I.R. MAX.
2) 'AK' DIMENSION UNDER 12.000 - DIAMETER TOLERANCE + .000 - .003
CONCENTRIC WITH SHAFT .004 T.I.R. MAX.
FACE RUNOUT WITHSHAFT .004 T.I.R. MAX.
'AK' DIMENSION 12.0 & OVER - DIAMETER TOLERANCE +.000 -.005
CONCENTRIC WITH SHAFT .007 T.I.R. MAX.
FACE RUNOUT WITH SHAFT .007 T.I.R. MAX.
3) 'D' DIMENSION TOLERANCE +.000 -.060
4) 'V' DIMENSION IS MAX. HUB LENGTH ON SHAFT
5) CONDUIT BOX CAN BE ROTATED IN 90° STEPS ON ITS OWN AXIS.
6) ALL DIMENSIONS NOT NOTED ARE NOMINAL DIMENSIONS CONSULT FACTORY FOR TOLERANCES.

CUSTOMER IS RESPONSIBLE FOR DETERMINING THAT BALDOR'S PRODUCT WILL PERFORM SUITABLY IN THE INTENDED APPLICATION.

REV. DESC: REV. "D" DIM TO +.000 -.060 ONLY			BALDOR
REV. LTR: B	VERSION: 01	TDR: 000000752566	
FILE: \RGG\00019\509	REVISED: 10:47:40 06/20/2012	BY: RGGNAS	DIM SHEET
MTL: -			SH 1 of 1

880-1