36LYP128

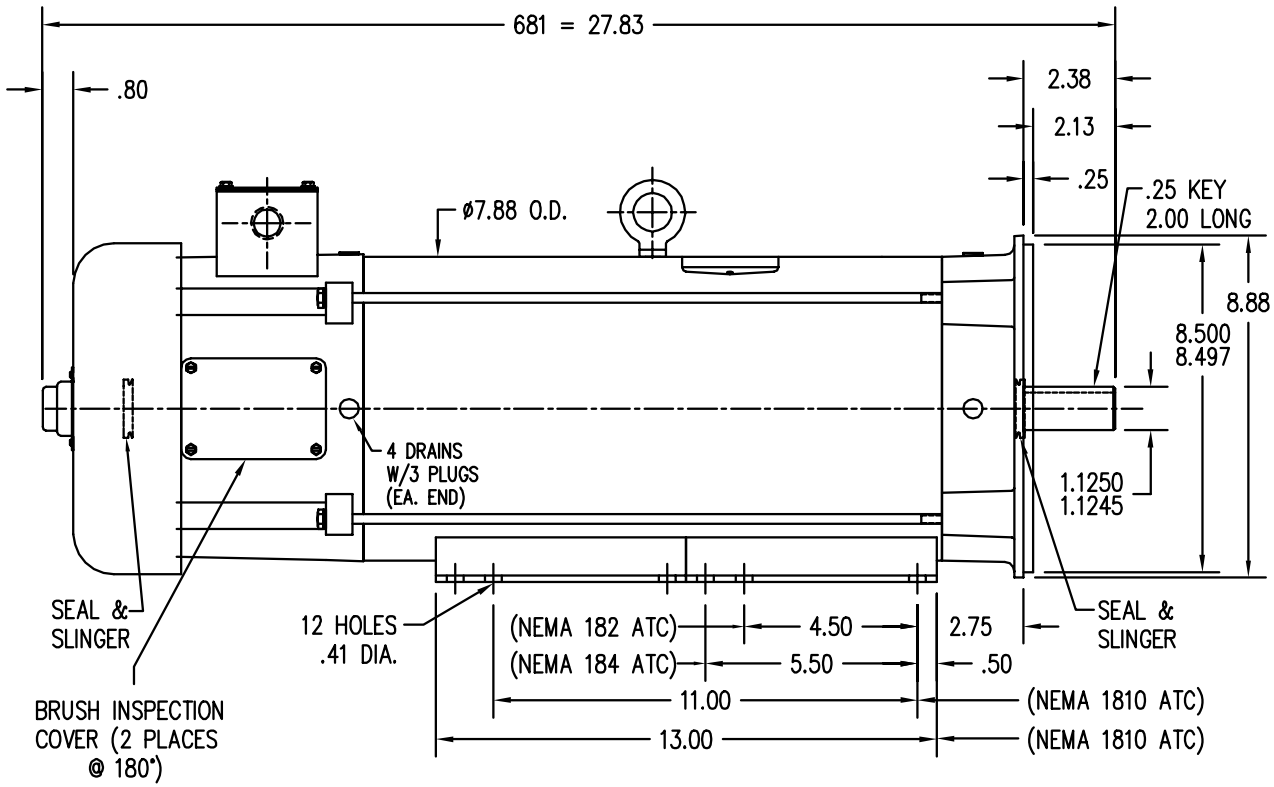

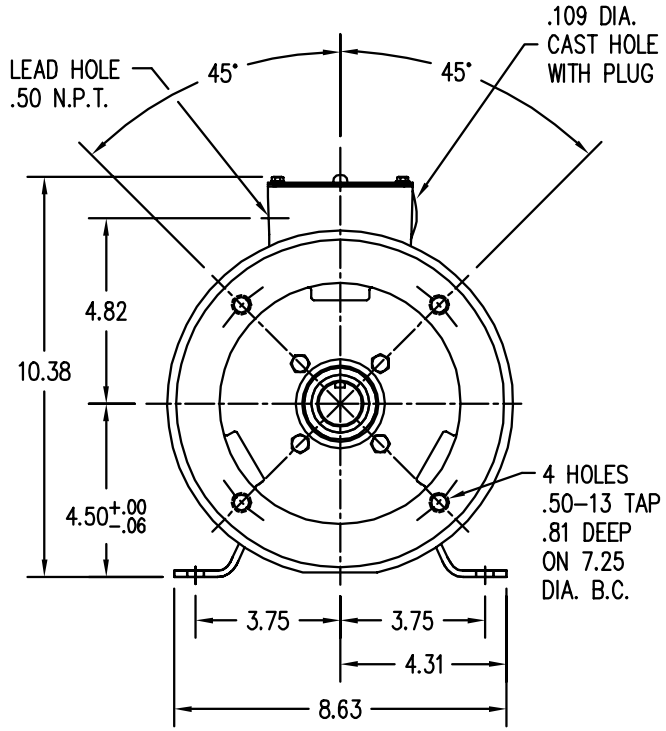

PULLEY END DETAIL

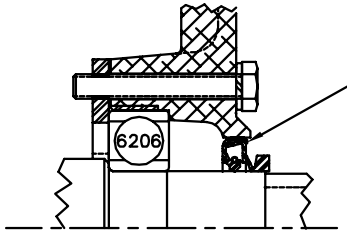

APPLY COAT OF RED SEALER UNDER RETAINER RING BOLT HEAD & AROUND SEAL HOUSING BEFORE PRESSING IN SEAL.

CUSTOMER IS RESPONSIBLE FOR DETERMINING THAT MOTOR PERFORMANCE IS SUITABLE IN THE APPLICATION.

REV. DESC: SHOW CAST HOLE & PLUG IN KOBX, REMOVE DRAIN LABEL			
REV. LTR: H	BY: MAW	REVISED: 10:04:06 01/13/2005	TDR: 353653
36LYP128		FILE: AAA00019513	REF: 36LYP128
		MTL: –	

BALDOR ELECTRIC Co.

STD HORZ "ATC" TEFC 36PM TYPE 681 PM 182–4ATC,1810ATC,MFTK

36LYP128