35LYA012

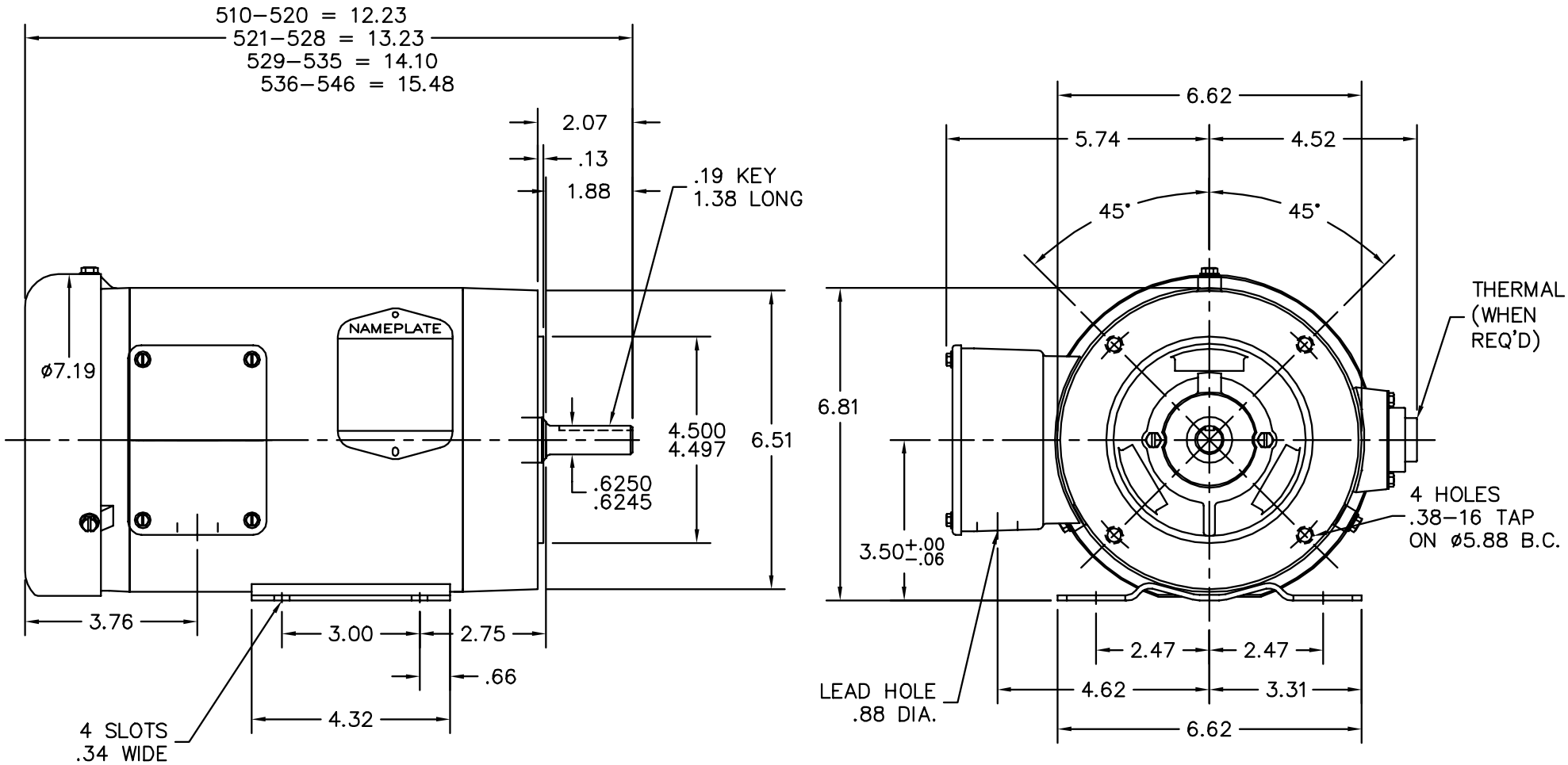

CUSTOMER IS RESPONSIBLE FOR DETERMINING THAT BALDOR'S PRODUCT WILL PERFORM SUITABLY IN THE INTENDED APPLICATION.

REV. DESC: REPLACE 35SB0008 W/35SB2081 & 35BA4010 IN MECH DWG		
REV. LTR: R	VERSION: 06	TDR: 000000968021
FILE: \AAA\00002\448	REVISED: 02:56:52 02/25/2016	BY: FGCHAH1
MTL: –		

BALDOR

STD HORZ 56C TEFC 35M

SH 1 of 1

35LYA012