34LYK052

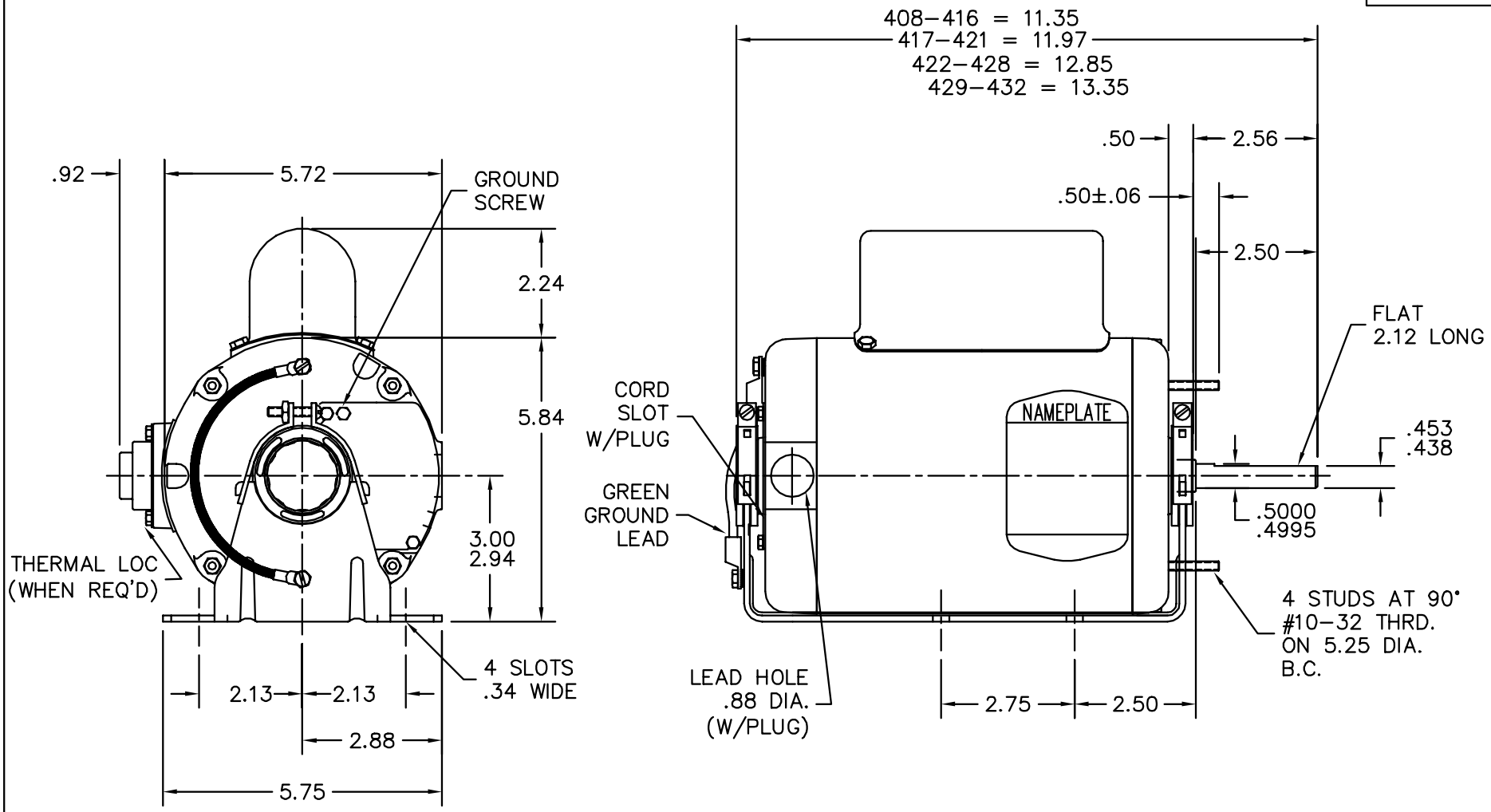

CUSTOMER IS RESPONSIBLE FOR DETERMINING THAT MOTOR PERFORMANCE IS SUITABLE IN THE APPLICATION.

REV. DESC: REPLACED 34SH2671 TO 34SH2891			
REV. LTR: G	BY: YTD	REVISED: 11:10:26 02/09/2004	TDR: 322935
34LYK052		FILE: AAA00027369	REF: 34LYK052
		MTL: –	

BALDOR ELECTRIC Co.

RESIL MTD MODEL 34C NEMA 48Z TENV W/EXTEND T–BOLTS

34LYK052