885-3

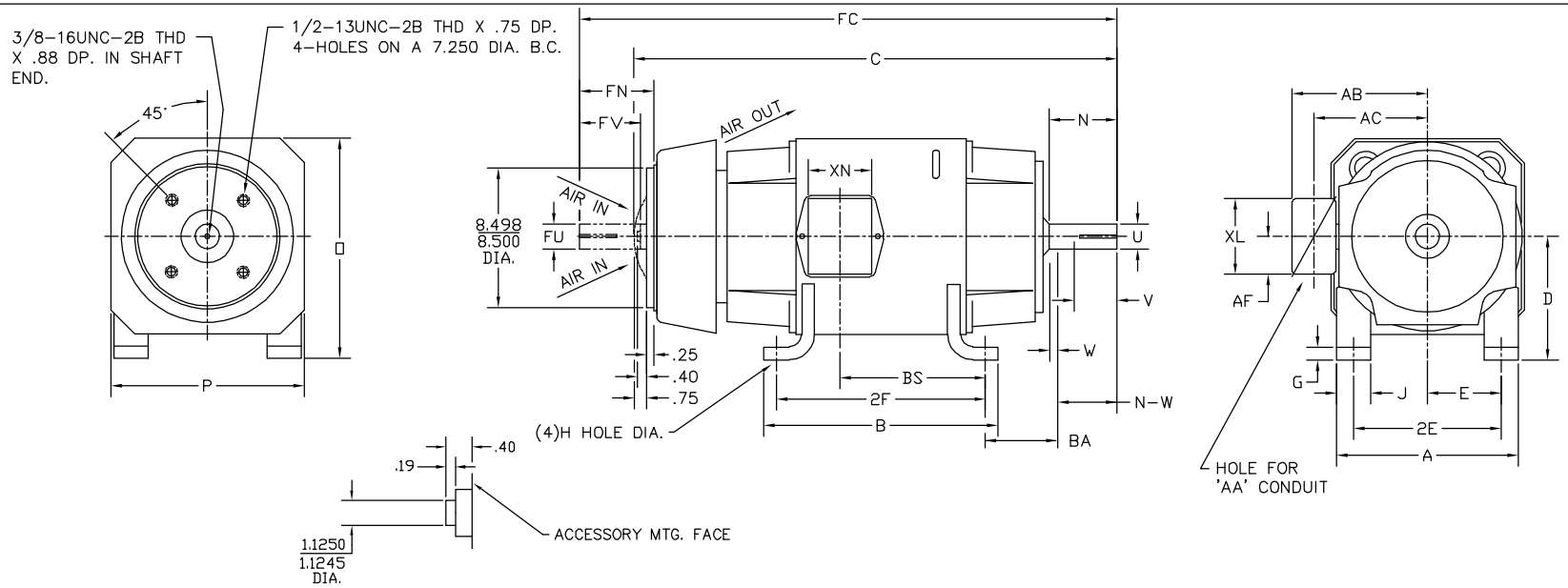

	FOOT MOUNTING						D.E. SHAFT EXTENSION					DRIVE KEY		ACC SHAFT EXTENSION			ACC KEY		FRAME						
FRAME	BA	E	2F	G	H	J	N	N-W	U	V	W	KEY-SQ.	KEY-LONG	FN	FU	FV	KEY-SQ.	KEY-LONG	A	B	C	FC	D	O	P
287AT	4.75	5.50	12.50	.69	.531	2.50	3.91	3.75	1.875	3.50 [3]	.16	.500	2.50	3.44	1.625	3.19	.375	2.44	13.81	14.13	34.09	37.08	7.00 [2]	13.88	13.75
288AT	4.75	5.50	14.00	.69	.531	2.50	3.91	3.75	1.875	3.50 [3]	.16	.500	2.50	3.44	1.625	3.19	.375	2.44	13.81	15.62	35.84	39.25	7.00 [2]	13.88	13.75
2810AT	4.75	5.50	18.00	.69	.531	2.50	3.91	3.75	1.875	3.50 [3]	.16	.500	2.50	3.44	1.625	3.19	.375	2.44	13.81	19.62	39.84	42.54	7.00 [2]	13.88	13.75
2811AT	4.75	5.50	20.00	.69	.531	2.50	3.91	3.75	1.875	3.50 [3]	.16	.500	2.50	3.44	1.625	3.19	.375	2.44	13.81	21.62	43.84	45.83	7.00 [2]	13.88	13.75
2813AT	4.75	5.50	25.00	.69	.531	2.50	3.91	3.75	1.875	3.50 [3]	.16	.500	2.50	3.44	1.625	3.19	.375	2.44	13.81	26.62	47.84	49.12	7.00 [2]	13.88	13.75

	CONDUIT BOX							ARM APPROX. WK^2 LBS.FT.^{2}	APPROXIMATE WEIGHT
FRAME	AA	AB	AC	AF	BS	XL	XN		
287AT	1 1/4	11.88	9.25	5.00	10.89	7.88	5.25	4.67	556 [5]
288AT	1 1/4	11.88	9.25	5.00	12.64	7.88	5.25	5.36	616 [5]
2810AT	1 1/4	11.88	9.25	5.00	16.64	7.88	5.25	6.80	776 [5]
2811AT	1 1/4	11.88	9.25	5.00	19.14	7.88	5.25	7.62	785 [5]
2813AT	1 1/4	11.88	9.25	5.00	23.64	7.88	5.25	9.40	792 [5]

1) SHAFT DIAMETERS TO 1.500 TOLERANCE +.0000 -.0005
   SHAFT DIAMETERS ABOVE 1.500 TOLERANCE +.0000 -.0010
   SHAFT DIAMETERS TO 1.625 RUNOUT .002 T.I.R. MAX.
   SHAFT DIAMETERS ABOVE 1.625 RUNOUT .003 T.I.R. MAX.
2) 'D' DIMENSION TOLERANCE +.000 - .060
3) 'V' DIMENSION IS MAX. HUB LENGTH ON SHAFT
4) CONDUIT BOX CAN BE ROTATED IN 90° STEPS ON ITS OWN AXIS.
5) TOTAL WEIGHT OF MOTOR AND FAN COOLED PACKAGE.
6) ALL DIMENSIONS NOT NOTED ARE NOMINAL DIMENSIONS CONSULT FACTORY FOR TOLERANCES.

FOR F1 OR F2 CONDUIT BOX LOCATION SEE SALES ORDER

CUSTOMER IS RESPONSIBLE FOR DETERMINING THAT BALDOR'S PRODUCT WILL PERFORM SUITABLY IN THE INTENDED APPLICATION.

REV. DESC: RELOAD DRAWING TO BUS		
REV. LTR: C	VERSION: 02	TDR: 000000780453
FILE: \RGG\00019\543	REVISED: 03:11:12 01/09/2013	BY: RGGWT
MTL: -		

BALDOR

DIM SHEET

SH 1 of 1

885-3