609951-013

INDUSTRIAL DIRECT CURRENT MOTORS AND GENERATORS – RPM III

ENCLOSURE: TOTALLY ENCLOSED
MOUNTING:FOOT
METHOD OF DRIVE:COUPLED OR BELTED

COOLING: FAN COOLED
ACCESSORIES: PROVISION FOR TACHOMETER MOUNTING ONLY WHEN SPECIFIED

FRAMES SC2113ATZ THRU LC2812ATZ

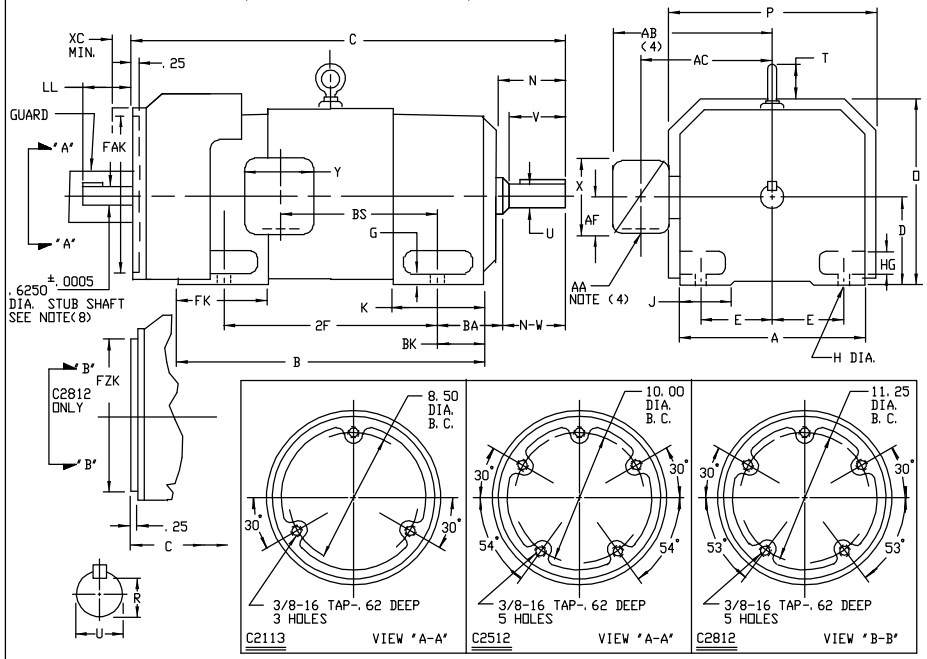

DIMENSIONS ARE IN INCHES

FRAME	A	D(1)	E	G	H	HG	J	O	P	T	BA	K	FK	BK	FAK(6)	FZK(7)	XC(5)
SC2113ATZ-LC2113ATZ	10.25	5.25	4.25	.44	.44	1.38	1.75	11.62	12.75	1.38	3.50	5.19	6.81	2.38	9.750	N/A	1.25
SC2512ATZ-LC2512ATZ	12.31	6.25	5.00	.50	.56	1.62	2.00	13.62	14.75	1.94	4.25	6.06	8.00	3.00	11.250	N/A	1.25
MC2812ATZ-LC2812ATZ	13.78	7.00	5.50	.62	.56	1.88	2.75	15.06	16.12	2.31	4.75	6.75	9.19	3.50	N/A	12.500	1.25

FRAME	C	B	BS	2F	DRIVE END SHAFT AND KEY							WT. LBS.
					N	N-W	U(2)	V	R(3)	SQ.	LGTH.	
SC2113ATZ	32.19	22.50	11.38	18.00	4.00	3.75	1.875	3.50	1.591	.500	2.50	355
MC2113ATZ	33.44	23.75	12.62	18.00	4.00	3.75	1.875	3.50	1.591	.500	2.50	380
LC2113ATZ	35.06	25.38	14.25	18.00	4.00	3.75	1.875	3.50	1.591	.500	2.50	410
SC2512ATZ	35.94	25.06	12.06	20.00	4.50	4.25	2.125	4.00	1.845	.500	3.00	555
MC2512ATZ	37.44	26.56	13.56	20.00	4.50	4.25	2.125	4.00	1.845	.500	3.00	590
LC2512ATZ	38.94	28.06	15.06	20.00	4.50	4.25	2.125	4.00	1.845	.500	3.00	630
MC2812ATZ	41.62	29.94	14.25	22.00	5.00	4.75	2.375	4.50	2.021	.625	3.50	835
LC2812ATZ	43.88	32.19	16.50	22.00	5.00	4.75	2.375	4.50	2.021	.625	3.50	900

(1) 'D' DIMENSION WILL NOT BE EXCEEDED. SHIMS UP TO .03 INCHES IN THICKNESS ARE USUALLY REQUIRED FOR COUPLED OR GEARED MACHINES.
(2) 'U' VARIES----+.000 -.001
(3) 'R' VARIES----+.000 -.015
(4) TERMINAL BOX VARIES WITH H.P. FOR DIMENSIONS 'AA', 'AB', 'AC', 'AF', 'X' AND 'Y', SEE DRAWING NUMBER 609959-1.
(5) WALLS OR OBSTRUCTIONS MUST NOT ENCROACH ON AIR INLET SPACE 'XC'.
(6) 'FAK' VARIES +.005 -.000----FACE RUNOUT AND ECCENTRICITY .007 MAX. T.I.R.
(7) 'FZK' VARIES +.000 -.005----FACE RUNOUT AND ECCENTRICITY .007 MAX. T.I.R.
(8) STUB SHAFT SUPPLIED ONLY WHEN SPECIFIED. KEY SIZE .188 X .188 X 1.00
(9) FOR RE-045 OR SPY PROVISIONS ON 'C2812' ADD 1.00 TO 'LL' DIMENSION.
TERMINAL BOX CAN BE ROTATED FOR LEAD OUTLET AT TOP, SIDES OR BOTTOM.
TERMINAL BOX LOCATED ON OPPOSITE SIDE WHEN F-2, W-1, W-4, W-5, W-7, OR C-1 MOUNTING IS SPECIFIED. BOX LOCATED ON TOP WHEN SPECIFIED.
MOTOR WEIGHT MAY VARY 15% FOR NON-STANDARD RATINGS AND/OR ACCESSORIES.
IF MOUNTING CLEARANCE DETAILS ARE REQUIRED, CONSULT FACTORY.

TACHOMETER	LL
BC-42 BC-46 RD-11 RD-12 RD-51 RD-61 RD-62 RE-210 M627, M628 M727, M737 M738 DYNAPAR 74S	4.25
RE-045 SPY	3.80 1.12 SEE NOTE (9)

CUSTOMER IS RESPONSIBLE FOR DETERMINING THAT BALDOR'S PRODUCT WILL PERFORM SUITABLY IN THE INTENDED APPLICATION.

REV. DESC: LOADED TO BUS		
REV. LTR: –	VERSION: 00	TDR: 000000577407
FILE: \RGG\00015\557	REVISED: 11:02:01 01/26/2011	BY: CONNAS
MTL: –		

BALDOR

DIMENSION DRAWING,SC2113ATZ – LC2812ATZ,TEFC,FOOT MTG

SH 1 of 1

609951-013