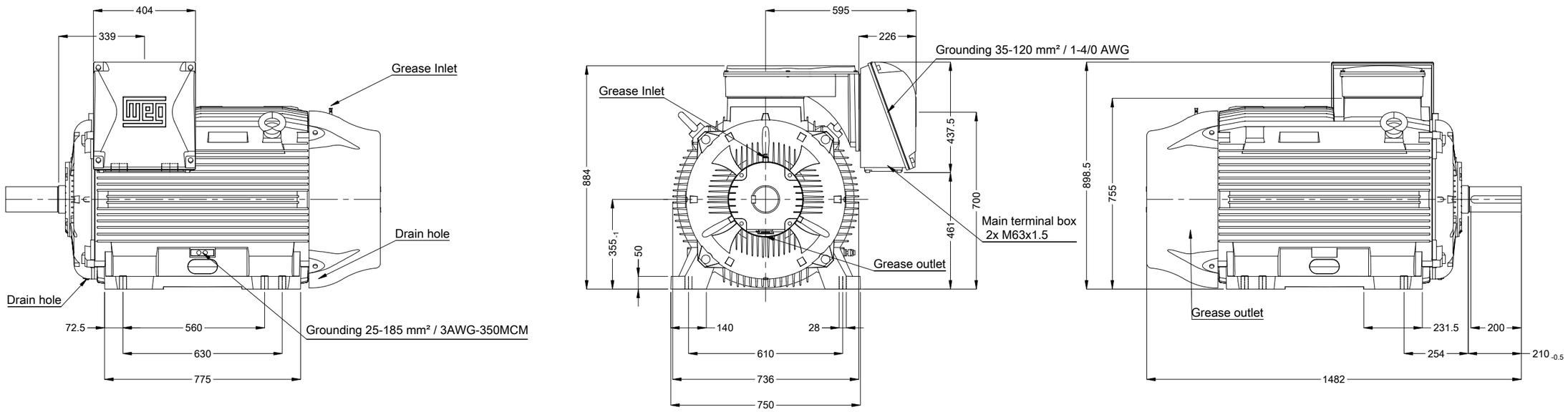

DE Shaft End

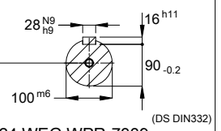

DM24 WEG WPR-7339

NDE endshield with electrically insulated bearing hub

Color RAL 5009

Painting plan 203A

Mounting B3L(E)

400 HP 06 Poles 60 Hz | A

Scale 1 : 17

ECM	LOC	SUMMARY OF MODIFICATIONS	EXECUTED	CHECKED	RELEASED	DATE	VER
			HYBRISUSER				00

EXECUTED	HYBRISUSER
CHECKED	
RELEASED	
REL. DATE	

THREE PH. MOTOR W22 IE2
FRAME 355M/L IP55 TEFC

PREVIEW

WDD 00

SHEET 1 / 1

Dimensions in mm

A3

WEG's property. Forbidden reproduction without previous authorization.