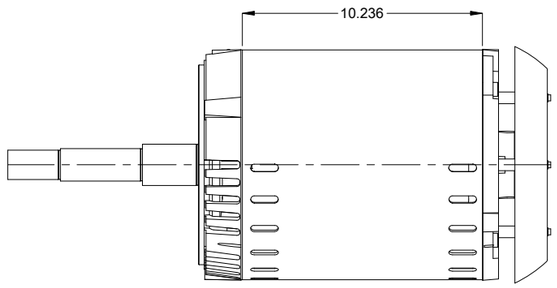

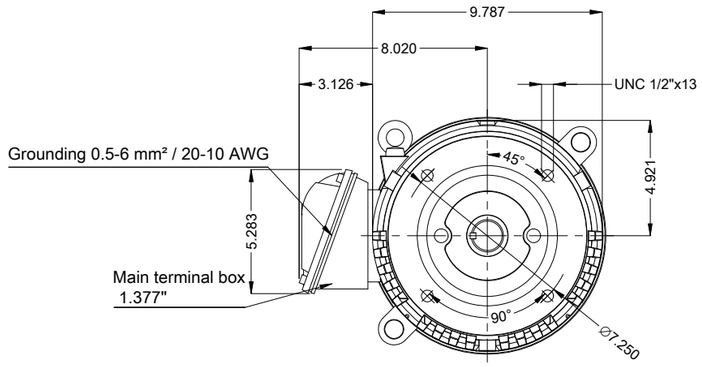

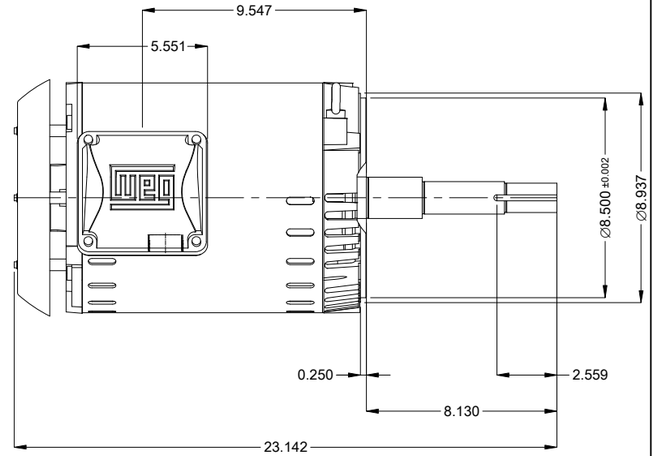

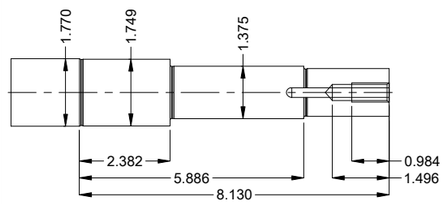

DE Shaft End

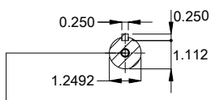

EUNC 1/2"-13 WEG WPR-7309

With drip cover
Color RAL 3002
Painting plan 207N
Mounting MARKET W-6/V18R(D)
Mounting W-6/V18R(D)

10 HP 02 Poles 60 Hz | A

Scale 2 : 13

ECM	LOC	SUMMARY OF MODIFICATIONS	EXECUTED	CHECKED	RELEASED	DATE	VER
			HYBRISUSER				00

EXECUTED	HYBRISUSER	THREE PH. MOTOR ROLLED STEEL JP HIGH EFF.
CHECKED		FRAME 213/5JP IP21 ODP
RELEASED		
REL. DATE		

PREVIEW

WDD 00

SHEET 1 / 1

Dimensions in inches

A3

WEG's property. Forbidden reproduction without previous authorization.