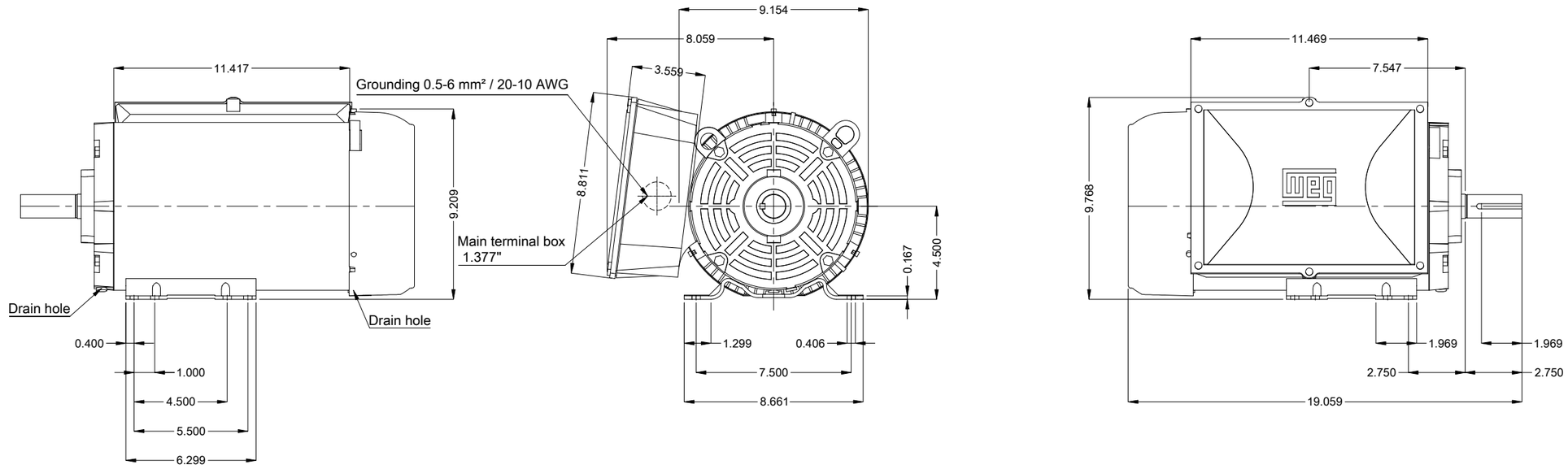

DE Shaft End

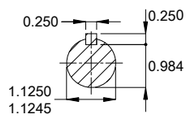

Mounting MARKET F-1/B3R(D)

Mounting F-1/B3R(D)

2 HP 04 Poles 60 Hz | A

Scale 1 : 6

ECM	LOC	SUMMARY OF MODIFICATIONS	EXECUTED	CHECKED	RELEASED	DATE	VER
			HYBRISUSER				00

EXECUTED	HYBRISUSER
CHECKED	
RELEASED	
REL. DATE	

SINGLE PH. MOTOR ROLLED STEEL FARM DUTY
FRAME 182/4T IP55 TEFC

PREVIEW

WDD 00

SHEET 1 / 1

Dimensions in inches

A3

WEG's property. Forbidden reproduction without previous authorization.