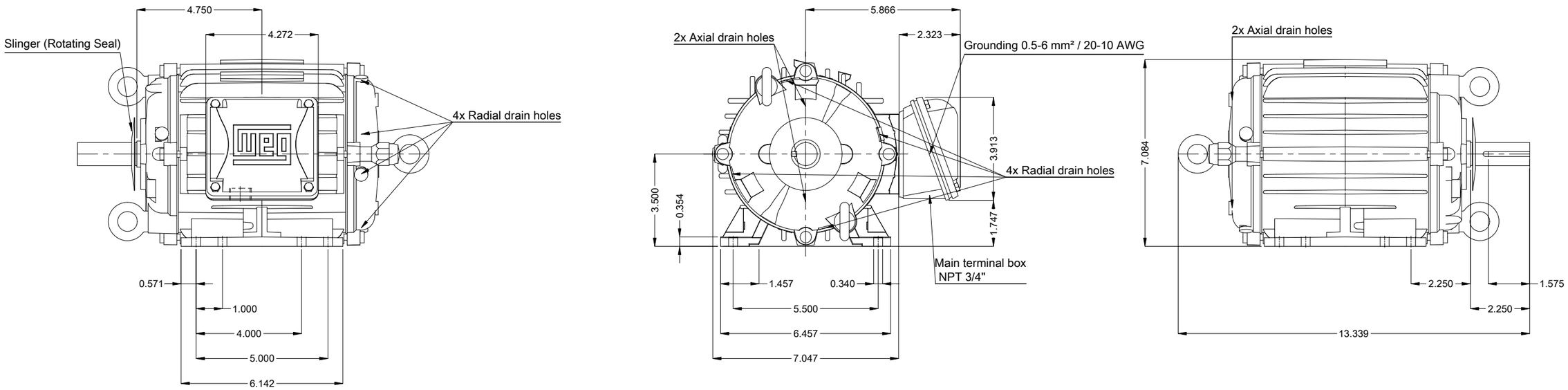


Without fan cover
Without fan
Color RAL 5009
Painting plan 202E
Mounting NEMA F-2
Mounting B3L(E)

DE Shaft End

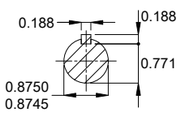


2 HP 04 Poles 60 Hz | A

Scale 1 : 4

| ECM | LOC | SUMMARY OF MODIFICATIONS | EXECUTED | CHECKED | RELEASED | DATE | VER |
|---|---|---|---|---|---|---|---|
| | | | HYBRISUSER | | | | 00 |

| | |
|---|---|
| EXECUTED | HYBRISUSER |
| CHECKED | |
| RELEASED | |
| REL. DATE | |

THREE PH. MOTOR COOLING TOWER W22 NEMA PREM. EFF.
FRAME 143/5T IP55 TEAO

PREVIEW

WDD 00

SHEET 1 / 1

Dimensions in inches

A3

WEG's property. Forbidden reproduction without previous authorization.