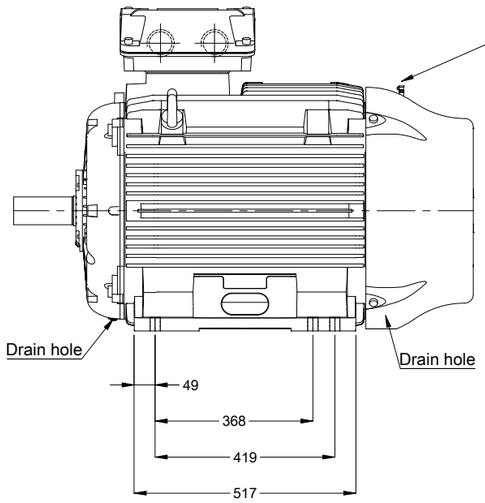

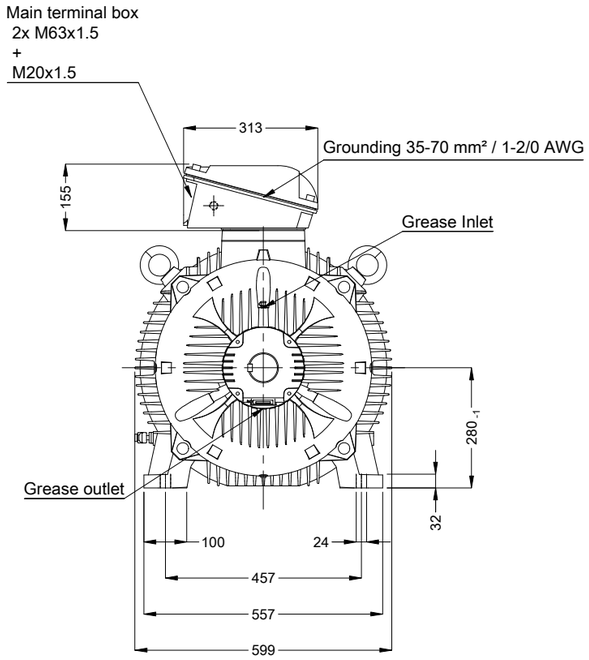

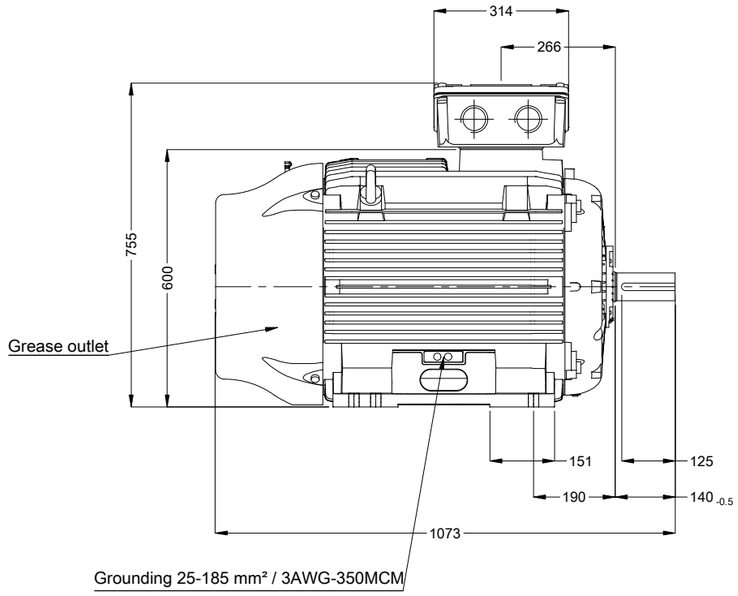

Without vertical jackscrews
Color RAL 5009
Painting plan 203A
Mounting B3T

DE Shaft End

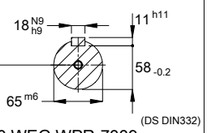

DM20 WEG WPR-7339

75 kW 02 Poles 50 Hz | A

Scale 1 : 14

ECM	LOC	SUMMARY OF MODIFICATIONS	EXECUTED	CHECKED	RELEASED	DATE	VER
			HYBRISUSER				00

EXECUTED	HYBRISUSER	THREE PH. MOTOR W22 IE2
CHECKED		FRAME 280S/M IP55 TEFC
RELEASED		
REL. DATE		

PREVIEW

WDD 00

SHEET 1 / 1

Dimensions in mm

A3

WEG's property. Forbidden reproduction without previous authorization.