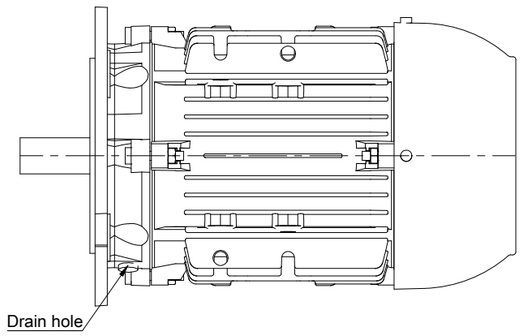

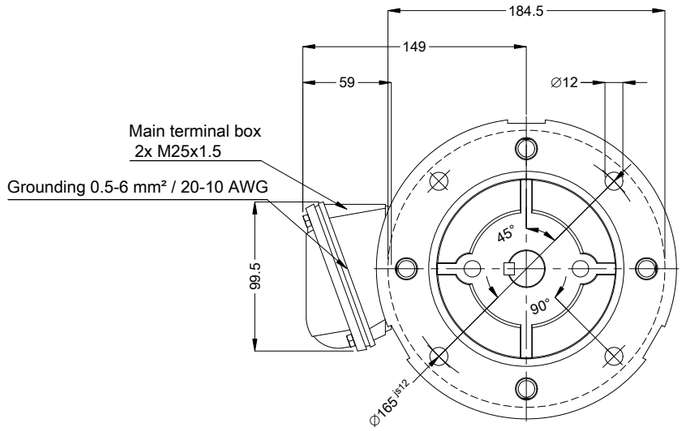

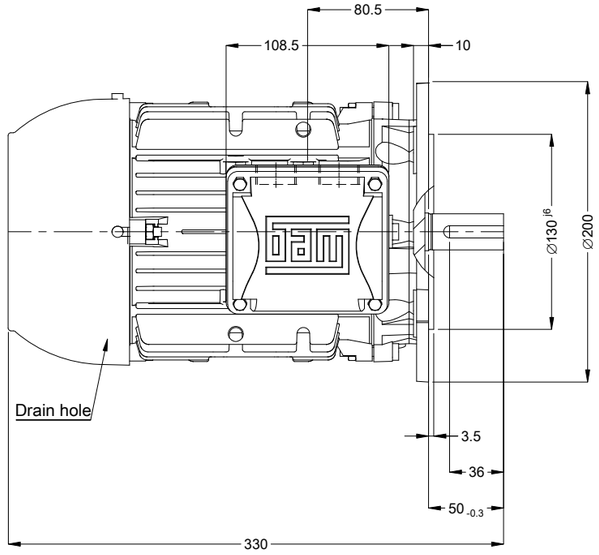

Connection cables connected in the high voltage
Bearing cap
Outlet leads directed to up when looking at shaft end
Color RAL 5009
Painting plan 207N
Mounting B5R(D)

DE Shaft End

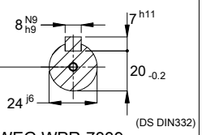

DM8 WEG WPR-7339

2 HP 04 Poles 60 Hz | A

Scale 1 : 4

ECM	LOC	SUMMARY OF MODIFICATIONS	EXECUTED	CHECKED	RELEASED	DATE	VER
			HYBRISUSER				00

EXECUTED	HYBRISUSER	THREE PH. MOTOR MULTIMOUNTIN IE3
CHECKED		FRAME 90S/L IP55 TEFC
RELEASED		
REL. DATE		

PREVIEW

WDD 00

SHEET 1 / 1

Dimensions in mm

A3

WEG's property. Forbidden reproduction without previous authorization.