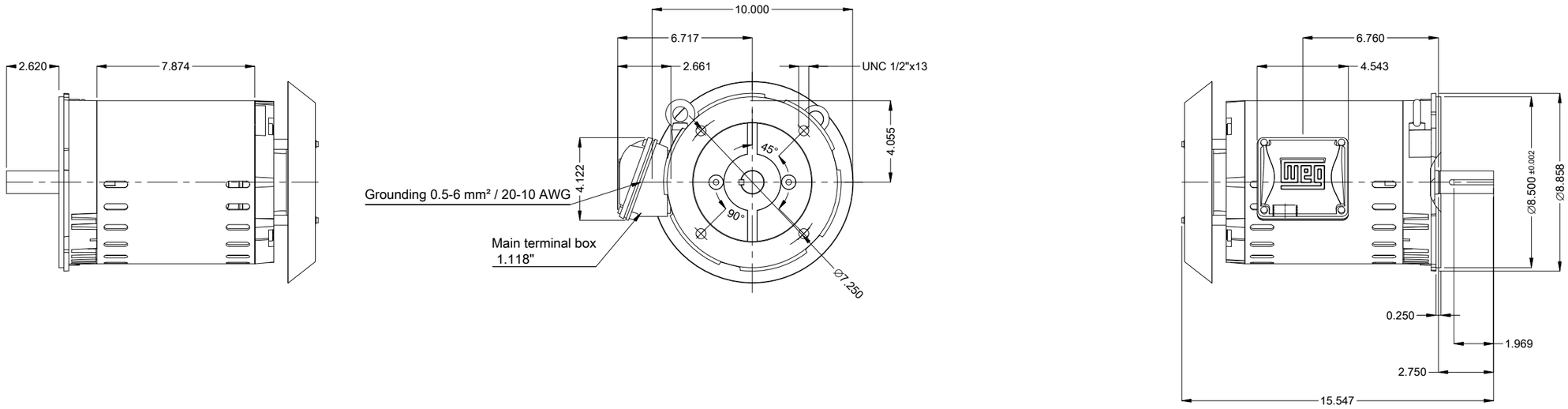

DE Shaft End

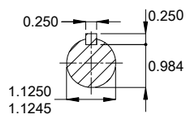

- With drip cover
- Color Munsell N 1 matte black
- Painting plan 207N
- Mounting MARKET W-6/V18R(D)
- Mounting W-6/V18R(D)

5 HP 02 Poles 60 Hz | A

Scale 1 : 6

ECM	LOC	SUMMARY OF MODIFICATIONS	EXECUTED	CHECKED	RELEASED	DATE	VER
			HYBRISUSER				00

EXECUTED	HYBRISUSER	THREE PH. MOTOR ROLLED STEEL NEMA PREM. EFF.
CHECKED		FRAME 182/4TC IP21 ODP
RELEASED		
REL. DATE		

PREVIEW

WDD 00

SHEET 1 / 1

Dimensions in inches

A3

WEG's property. Forbidden reproduction without previous authorization.