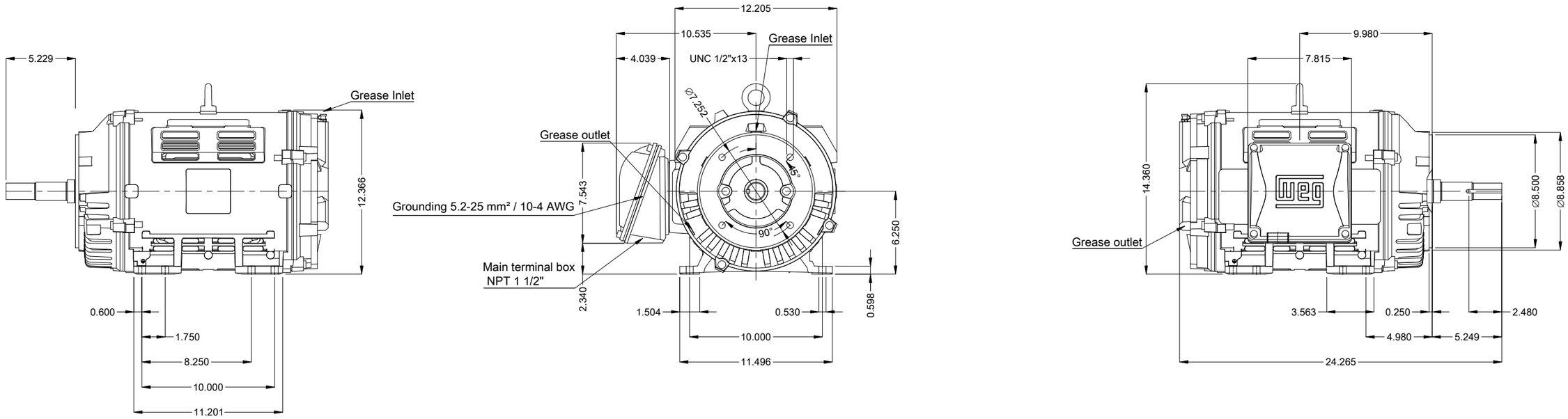

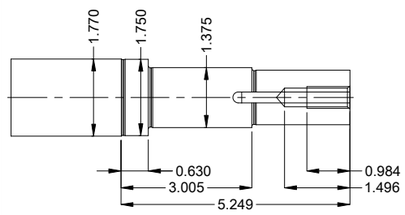

DE Shaft End

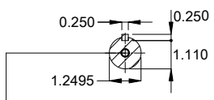

EUNC 1/2"-13 WEG WPR-7309

Color RAL 5009

Painting plan 203A

Mounting NEMA F-1

Mounting B34D

10 HP 06 Poles 60 Hz | A

Scale 1 : 8

ECM	LOC	SUMMARY OF MODIFICATIONS	EXECUTED	CHECKED	RELEASED	DATE	VER
			HYBRISUSER				00

EXECUTED	HYBRISUSER	THREE PH. MOTOR W40 PUMP JM NEMA PREM. EFF.
CHECKED		FRAME 254/6JM IP23 ODP
RELEASED		
REL. DATE		

PREVIEW

WDD 00

SHEET 1 / 1

Dimensions in inches

A3

WEG's property. Forbidden reproduction without previous authorization.