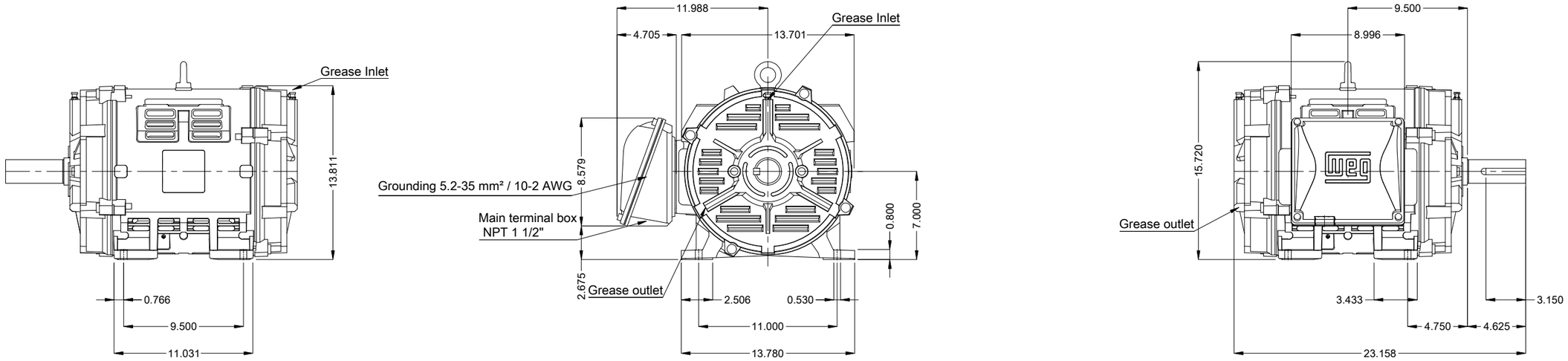


| |
|---|
| Internal AEGIS ground ring on the DE |
| Bearing cap |
| Color RAL 5009 |
| Painting plan 203A |
| Mounting NEMA F-1 |
| Mounting B3R(D) |

DE Shaft End

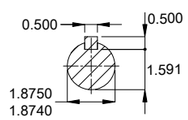


25 HP 04 Poles 60 Hz | A

Scale 1 : 9

| ECM | LOC | SUMMARY OF MODIFICATIONS | EXECUTED | CHECKED | RELEASED | DATE | VER |
|---|---|---|---|---|---|---|---|
| | | | HYBRISUSER | | | | 00 |

| | |
|---|---|
| EXECUTED | HYBRISUSER |
| CHECKED | |
| RELEASED | |
| REL. DATE | |

THREE PH. MOTOR W40 NEMA PREM. EFF.
FRAME 284T IP23 ODP

PREVIEW

WDD 00

SHEET 1 / 1

Dimensions in inches

A3

WEG's property. Forbidden reproduction without previous authorization.