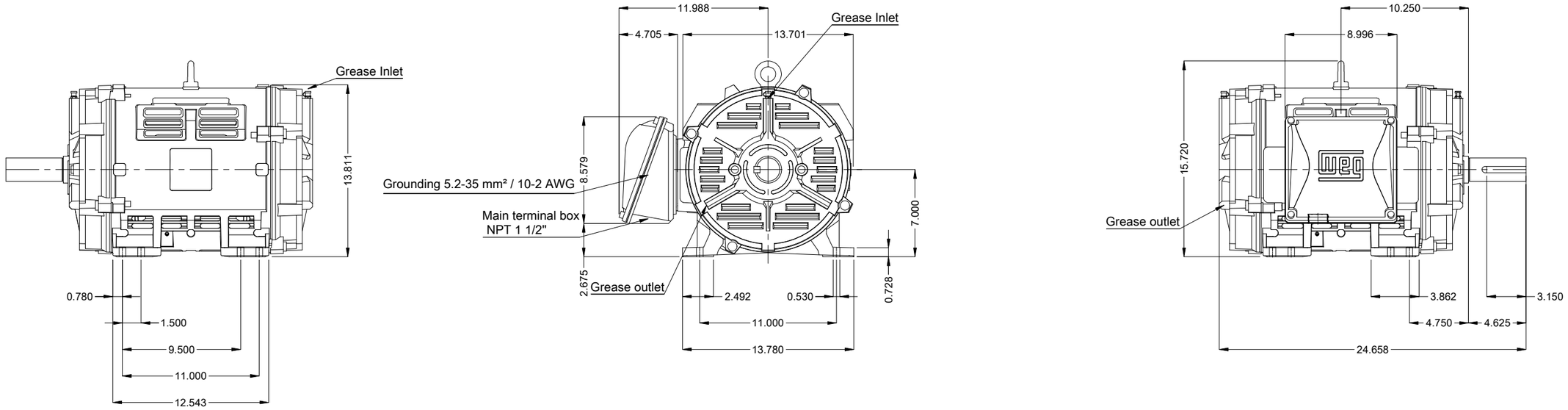

Internal AEGIS ground ring on the DE	
Bearing cap	
Color RAL 5009	
Painting plan 203A	
Mounting NEMA F-1	
Mounting B3R(D)	

DE Shaft End

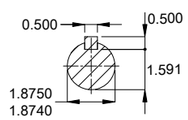

30 HP 04 Poles 60 Hz | A

Scale 1 : 9

ECM	LOC	SUMMARY OF MODIFICATIONS	EXECUTED	CHECKED	RELEASED	DATE	VER
			HYBRISUSER				00

EXECUTED	HYBRISUSER
CHECKED	
RELEASED	
REL. DATE	

THREE PH. MOTOR W40 NEMA PREM. EFF.
FRAME 284/6T IP23 ODP

PREVIEW

WDD 00

SHEET 1 / 1

Dimensions in inches

A3

WEG's property. Forbidden reproduction without previous authorization.