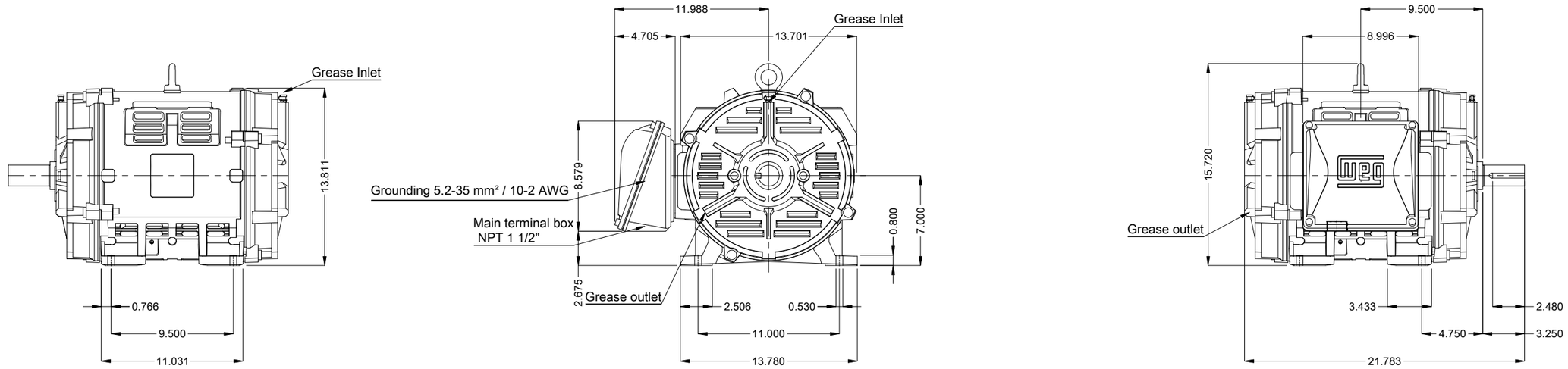

Internal AEGIS ground ring on the DE
Bearing cap
Color RAL 5009
Painting plan 203A
Mounting NEMA F-1
Mounting B3R(D)

DE Shaft End

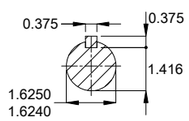

30 HP 02 Poles 60 Hz | A

Scale 1 : 9

ECM	LOC	SUMMARY OF MODIFICATIONS	EXECUTED	CHECKED	RELEASED	DATE	VER
			HYBRISUSER				00

EXECUTED	HYBRISUSER
CHECKED	
RELEASED	
REL. DATE	

THREE PH. MOTOR W40 NEMA PREM. EFF.
FRAME 284TS IP23 ODP

PREVIEW

WDD 00

SHEET 1 / 1

Dimensions in inches

A3

WEG's property. Forbidden reproduction without previous authorization.