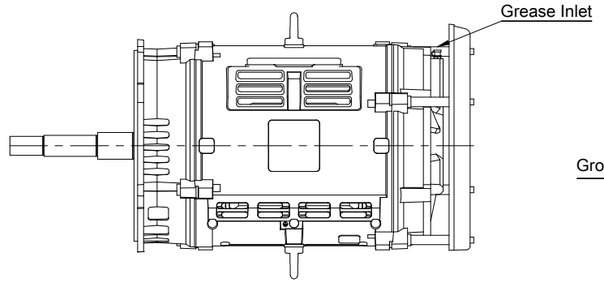

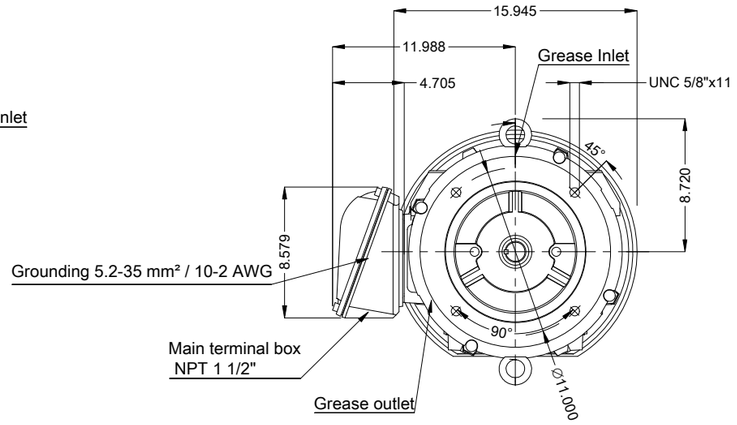

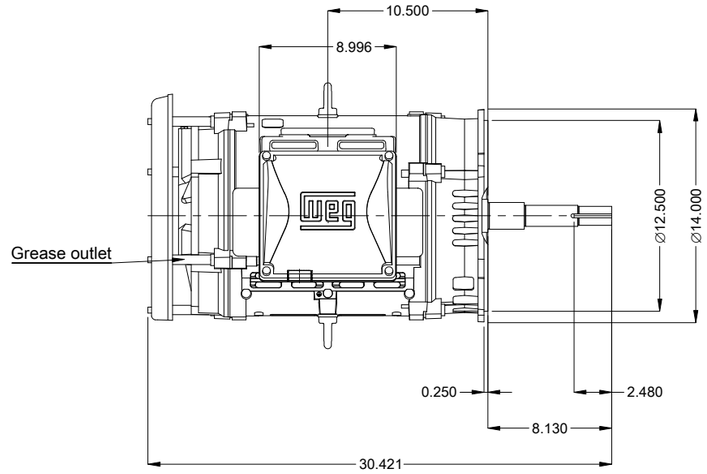

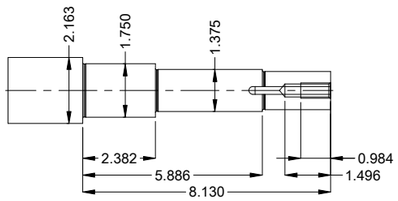

DE Shaft End

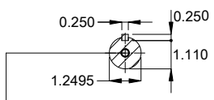

EUNC 1/2"-13 WEG WPR-7309

With drip cover
Color RAL 5009
Painting plan 203A
Mounting NEMA W-6
Mounting V18

30 HP 02 Poles 60 Hz | A

Scale 1 : 10

ECM	LOC	SUMMARY OF MODIFICATIONS	EXECUTED	CHECKED	RELEASED	DATE	VER
			HYBRISUSER				00

EXECUTED	HYBRISUSER
CHECKED	
RELEASED	
REL. DATE	

THREE PH. MOTOR W40 PUMP JP NEMA PREM. EFF.
FRAME 284/6JP IP23 ODP

PREVIEW

WDD 00

SHEET 1 / 1

Dimensions in inches

A3

WEG's property. Forbidden reproduction without previous authorization.