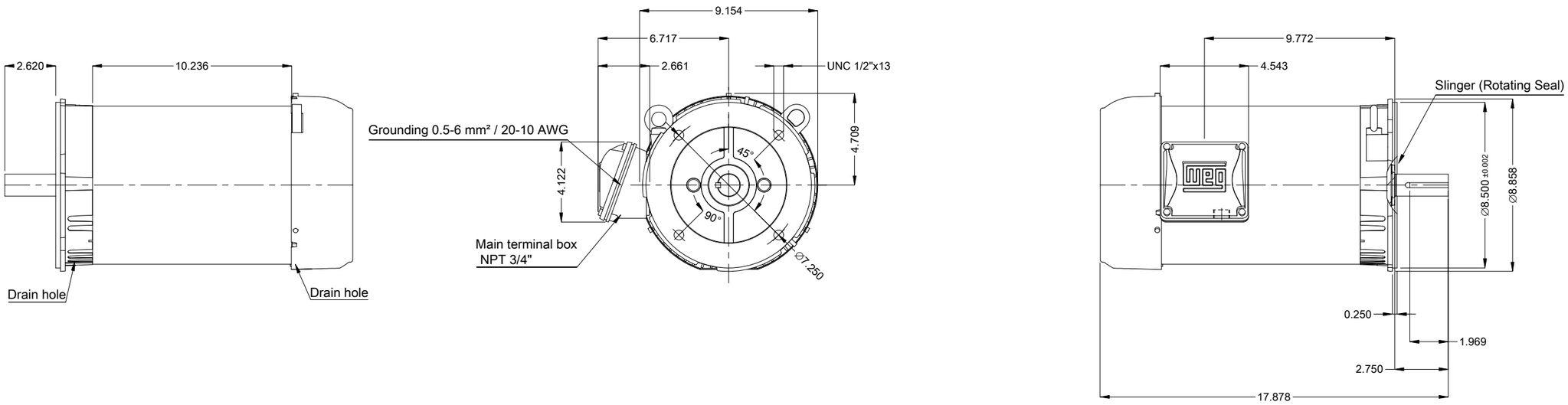

DE Shaft End

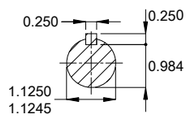

Shaft material - stainless steel AISI 304

Painting plan 205E

Mounting MARKET F-1/B14R(D)

Mounting F-1/B14R(D)

5 HP 04 Poles 60 Hz | A

Scale 1 : 6

ECM	LOC	SUMMARY OF MODIFICATIONS	EXECUTED	CHECKED	RELEASED	DATE	VER
			HYBRISUSER				00

EXECUTED	HYBRISUSER
CHECKED	
RELEASED	
REL. DATE	

THREE PH. MOTOR ROLLED STEEL HYDROWASH NEMA PREM EFF
FRAME 182/4TC IP56 TEFC

PREVIEW

WDD 00

SHEET 1 / 1

Dimensions in inches

A3

WEG's property. Forbidden reproduction without previous authorization.