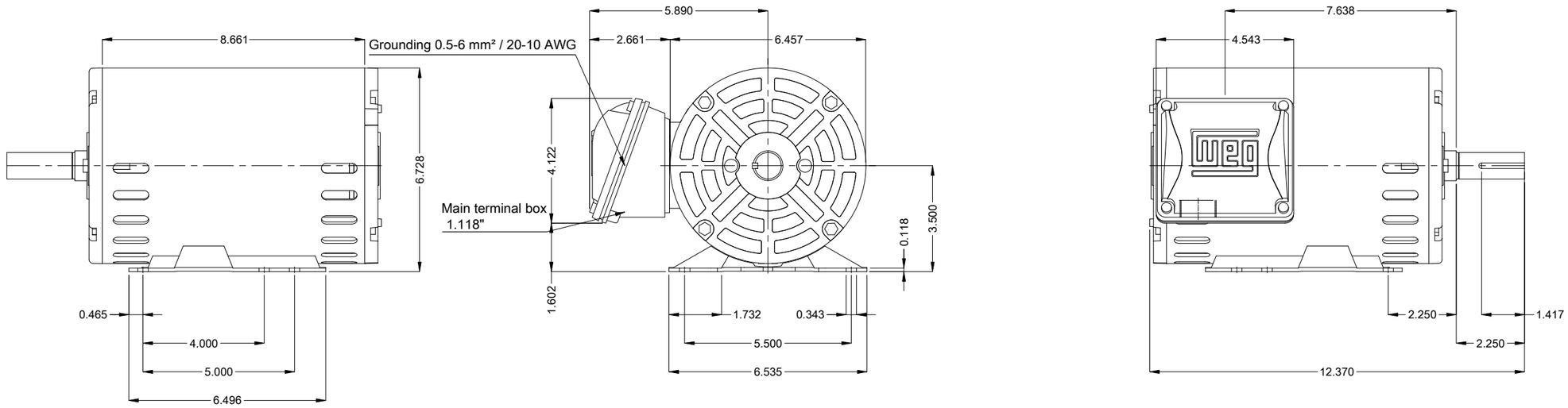


Internal AEGIS ground ring on the DE
Bearing cap
Color Munsell N 1 matte black
Painting plan 207N
Mounting MARKET F-1/B3R(D)
Mounting F-1/B3R(D)

DE Shaft End

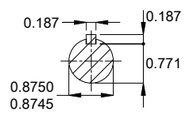


2 HP 04 Poles 60 Hz | A

Scale 1 : 4

| ECM | LOC | SUMMARY OF MODIFICATIONS | EXECUTED | CHECKED | RELEASED | DATE | VER |
|---|---|---|---|---|---|---|---|
| | | | HYBRISUSER | | | | 00 |

| | |
|---|---|
| EXECUTED | HYBRISUSER |
| CHECKED | |
| RELEASED | |
| REL. DATE | |

THREE PH. MOTOR ROLLED STEEL NEMA PREM. EFF.
FRAME 143/5T IP21 ODP

PREVIEW
WDD 00
SHEET 1 / 1

Dimensions in inches

A3

WEG's property. Forbidden reproduction without previous authorization.