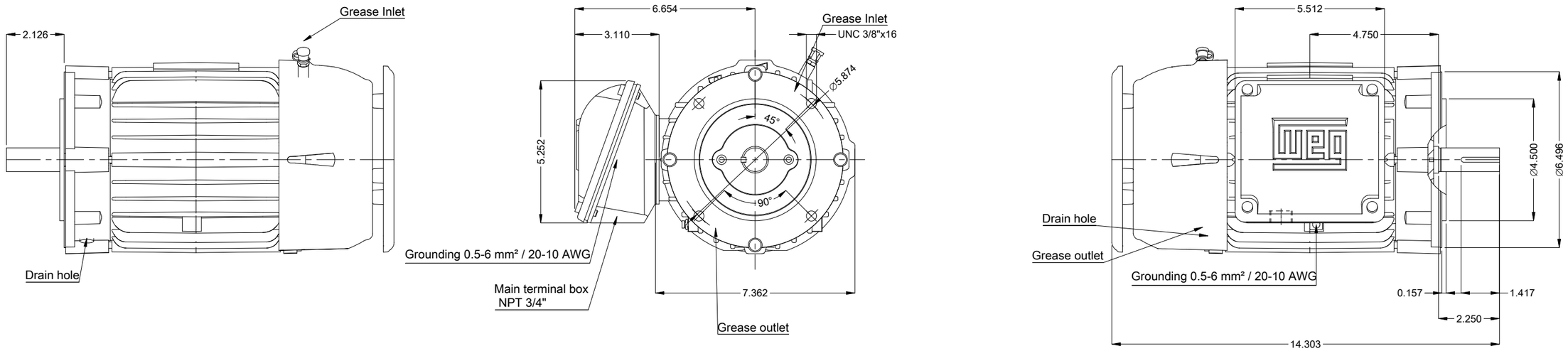

2 HP 04 Poles 60 Hz | A

			Scale	1 : 4			
			HYBRISUSER				00
ECM	LOC	SUMMARY OF MODIFICATIONS	EXECUTED	CHECKED	RELEASED	DATE	VER

EXECUTED	HYBRISUSER
CHECKED	
RELEASED	
REL. DATE	

THREE PH. MOTOR IEEE 841 W22 NEMA PREM. EFF.
FRAME 145TC IP56 TEFC

PREVIEW

WDD 00

SHEET 1 / 1

- With drip cover
- Grease outlet on endshields
- Color RAL 5009
- Painting plan 202E
- Mounting NEMA W-6
- Mounting V18

DE Shaft End

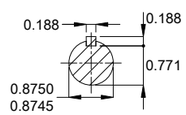

Dimensions in inches

A3

WEG's property. Forbidden reproduction without previous authorization.