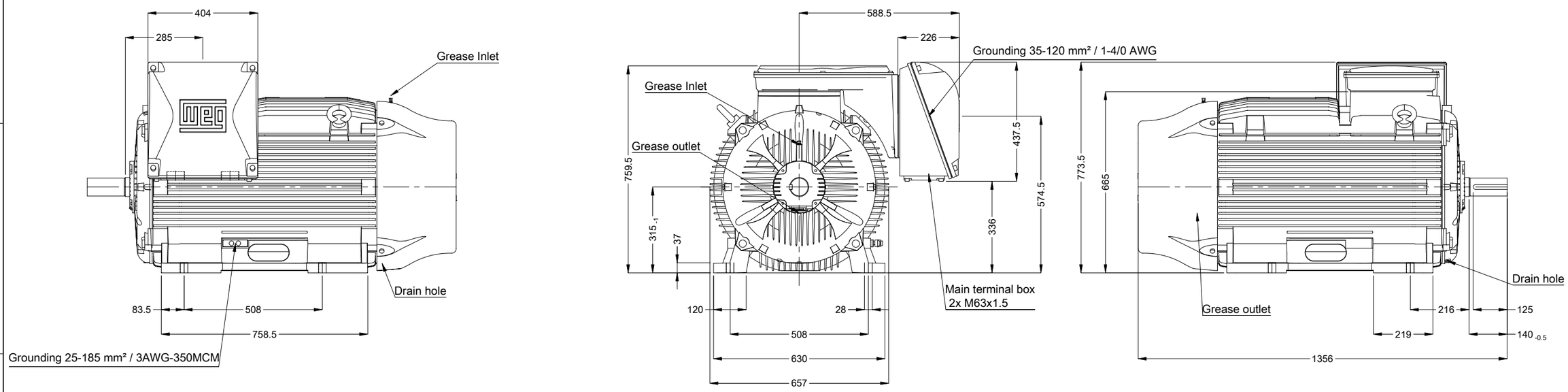

Continuous resin flow impregnation
Rotation CW and CCW
Without overload protector at bearing
Without alarm thermal protection
Without switch off thermal protection
NDE endshield with electrically insulated bearing hub
Color RAL 5009
Painting plan 203A
Mounting B3L(E)

DE Shaft End

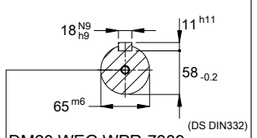

DM20 WEG WPR-7339

250 HP 02 Poles 60 Hz | A

Scale 1 : 15

ECM	LOC	SUMMARY OF MODIFICATIONS	EXECUTED	CHECKED	RELEASED	DATE	VER
			HYBRISUSER				00

EXECUTED	HYBRISUSER
CHECKED	
RELEASED	
REL. DATE	

THREE PH. MOTOR W22 IE4
FRAME 315L IP55 TEFC

PREVIEW
WDD 00
SHEET 1 / 1

Dimensions in mm

A3

WEG's property. Forbidden reproduction without previous authorization.