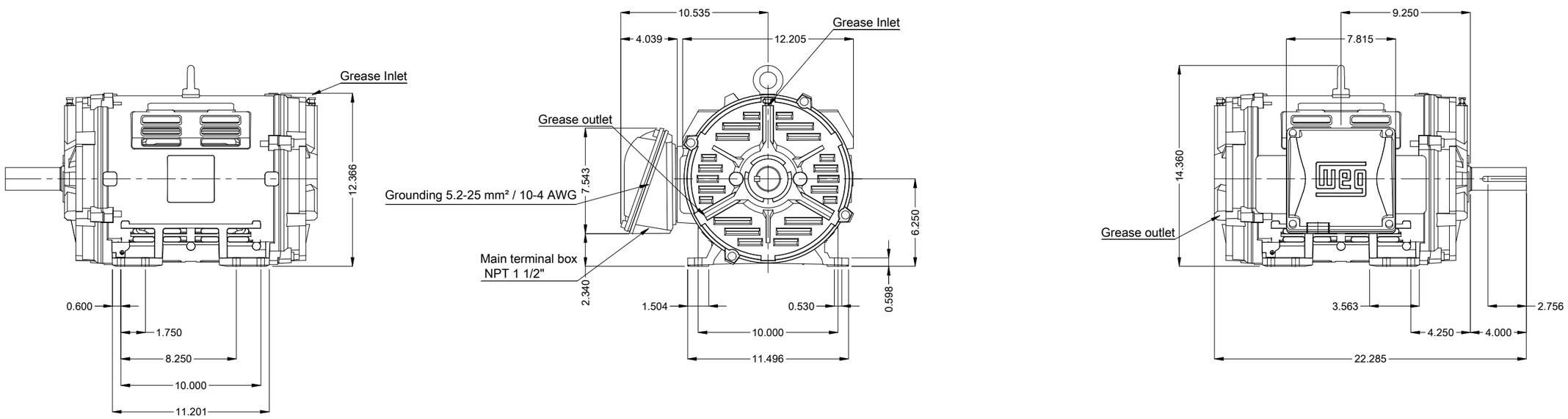


DE Shaft End

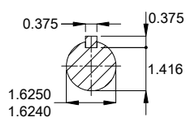


Color RAL 5009

Painting plan 203A

Mounting NEMA F-1

Mounting B3R(D)

25 HP 02 Poles 60 Hz | A

Scale 1 : 8

| ECM | LOC | SUMMARY OF MODIFICATIONS | EXECUTED | CHECKED | RELEASED | DATE | VER |
|---|---|---|---|---|---|---|---|
| | | | HYBRISUSER | | | | 00 |

| | |
|---|---|
| EXECUTED | HYBRISUSER |
| CHECKED | |
| RELEASED | |
| REL. DATE | |

THREE PH. MOTOR W40 NEMA PREM. EFF.
FRAME 254/6T IP23 ODP

PREVIEW

WDD 00

SHEET 1 / 1

Dimensions in inches

A3

WEG's property. Forbidden reproduction without previous authorization.