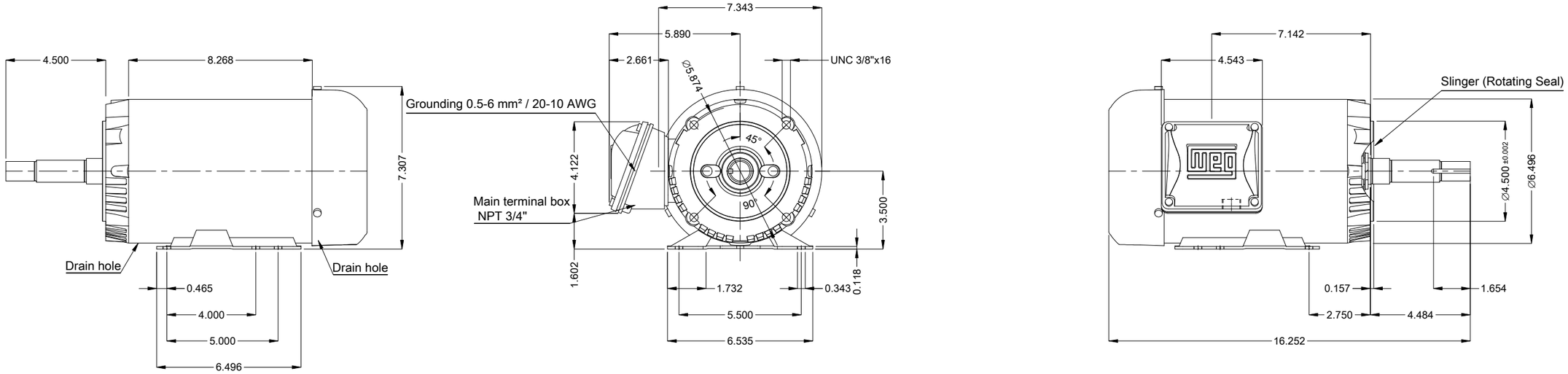

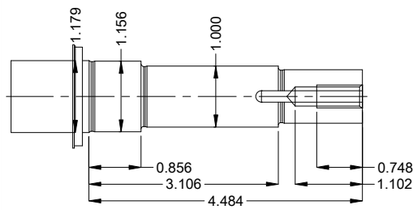

DE Shaft End

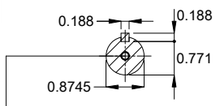

EUNC 3/8"-16 WEG WPR-7309

Shaft material - stainless steel AISI 304

Painting plan 205E

Mounting MARKET F-1/B34R(D)

Mounting B34D

1 HP 04 Poles 60 Hz | A

Scale 1 : 5

ECM	LOC	SUMMARY OF MODIFICATIONS	EXECUTED	CHECKED	RELEASED	DATE	VER
			HYBRISUSER				00

EXECUTED	HYBRISUSER	THREE PH. MOTOR ROLLED STEEL NEMA PREM. EFF.
CHECKED		FRAME 143/5JM IP56 TEFC
RELEASED		
REL. DATE		

PREVIEW

WDD 00

SHEET 1 / 1

Dimensions in inches

A3

WEG's property. Forbidden reproduction without previous authorization.