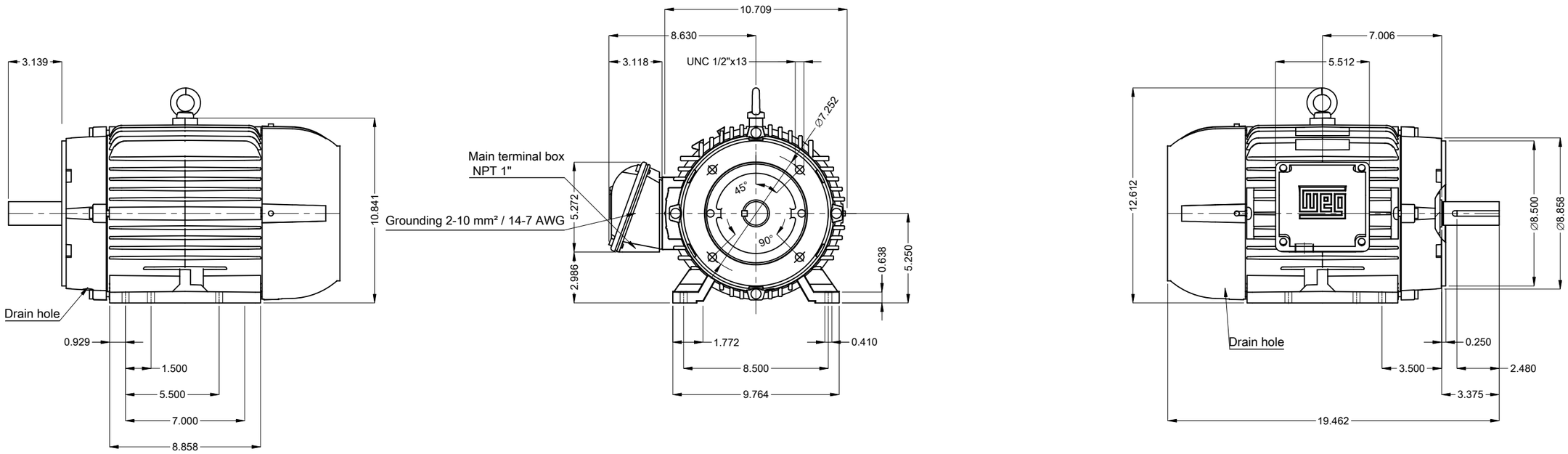

Internal AEGIS ground ring on the DE
Bearing cap
Color RAL 5009
Painting plan 207A
Mounting NEMA F-1
Mounting B34D

DE Shaft End

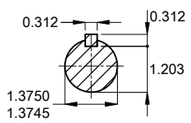

10 HP 02 Poles 60 Hz | A

Scale 2 : 13

ECM	LOC	SUMMARY OF MODIFICATIONS	EXECUTED	CHECKED	RELEASED	DATE	VER
			HYBRISUSER				00

EXECUTED	HYBRISUSER	THREE PH. MOTOR W22 NEMA PREM. EFF.
CHECKED		FRAME 213/5TC IP55 TEFC
RELEASED		
REL. DATE		

PREVIEW

WDD 00

SHEET 1 / 1

Dimensions in inches

A3

WEG's property. Forbidden reproduction without previous authorization.