SS86518

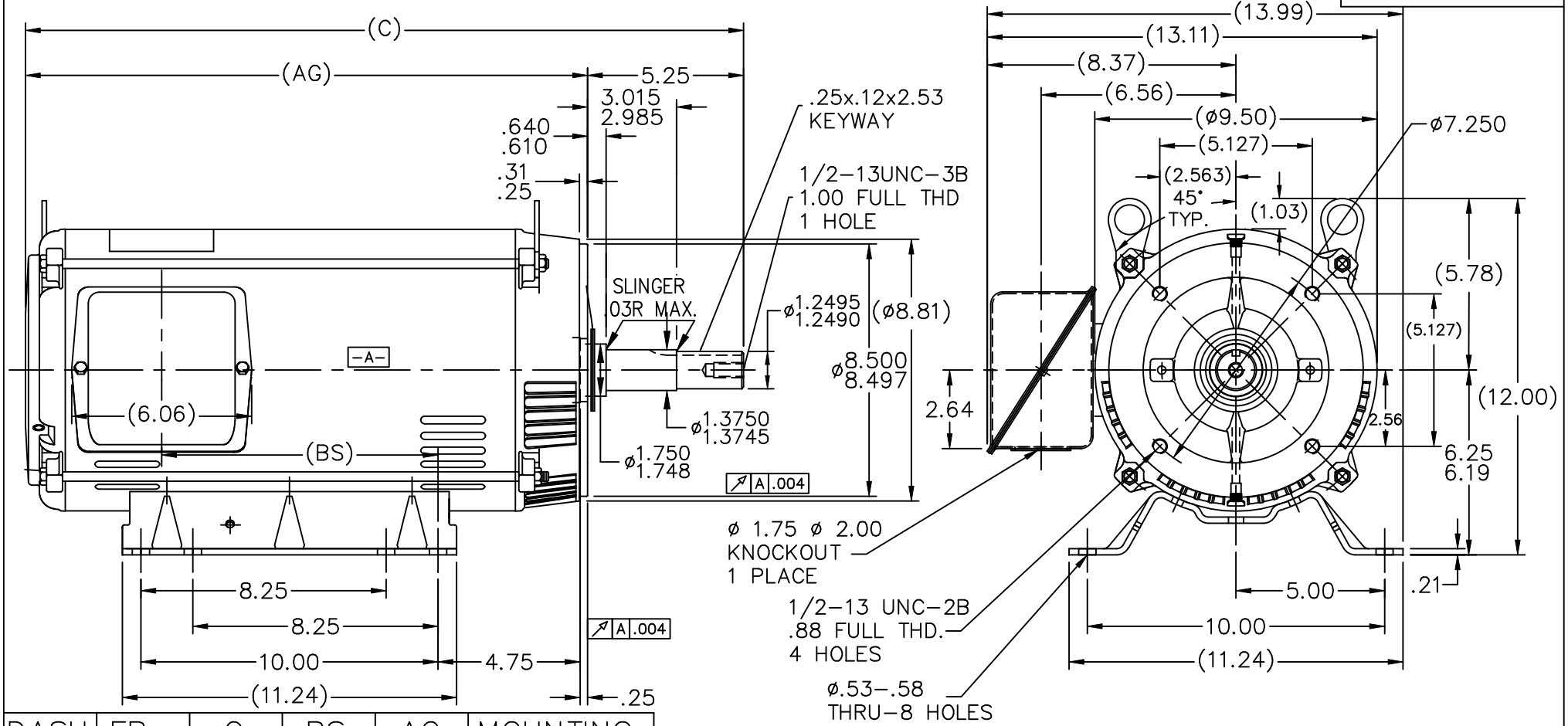

DASH	FR.	C	BS	AG	MOUNTING
1340	254JM	22.42	7.68	17.17	F1 OR F2
1515	254/256JM	24.17	9.43	18.92	F1 OR F2

NOTES:
1. NAMEPLATE TO BE READ FROM C'BOX SIDE OF MOTOR.
2. BOX CAN BE MOUNTED IN 90° STEPS.
3. BOX CAN BE MOUNTED ON OPPOSITE SIDE BY REMOVING BRACKETS AND TURNING FRAME 180°. (EXCEPT AS NOTED.)

NO.	REVISION	BY & DATE
6	UPDATED DRAWING	TJW 04/27/2007
5	ADDED 14.08 DIMENSION TO FRONT VIEW	RJW 12-09-2005
4	REDRAWN IN AUTOCAD	TAT 07-06-2004
3	UPDATED CONDUIT BOX CN 28427	CAV 01-31-2000
2	–1545 WAS FOR 256JM FR. ONLY CN 18683	KL 10-11-1994
1	NEW DRAWING	DJK 10-25-1993

TOLERANCES UNLESS SPECIFIED		
CHK	DEC.	INCHES
ML	.X	±.1
	.XX	±.03
	.XXX	±.005
	.XXXX	±.0005
	ANG	±7'30"

MARATHON ELECTRIC

TITLE OUTLINE
250 JM FR. – BB – TS – DR.PR. – 'C' FACE

MAT'L. "JM EXT."
FINISH

DRAWN DJK 10-19-1993
CHK ML 10-22-1993
APPD DRN 10-22-1993
SCALE 1=5
REF
FMF
PREV

THIS DRAWING IN DESIGN AND DETAIL IS OUR PROPERTY AND MUST NOT BE USED EXCEPT IN CONNECTION WITH OUR WORK ALL RIGHTS OF DESIGN AND INVENTION ARE RESERVED
THIS IS AN ELECTRONICALLY GENERATED DOCUMENT – DO NOT SCALE THIS PRINT

RFP
DIST LB
CAD FILE ss86518
SIZE A
DRAWING NO. SS86518
PAGE OF
REV. 6

7/26/2007 2:53:20 PM -