Uncontrolled Copy

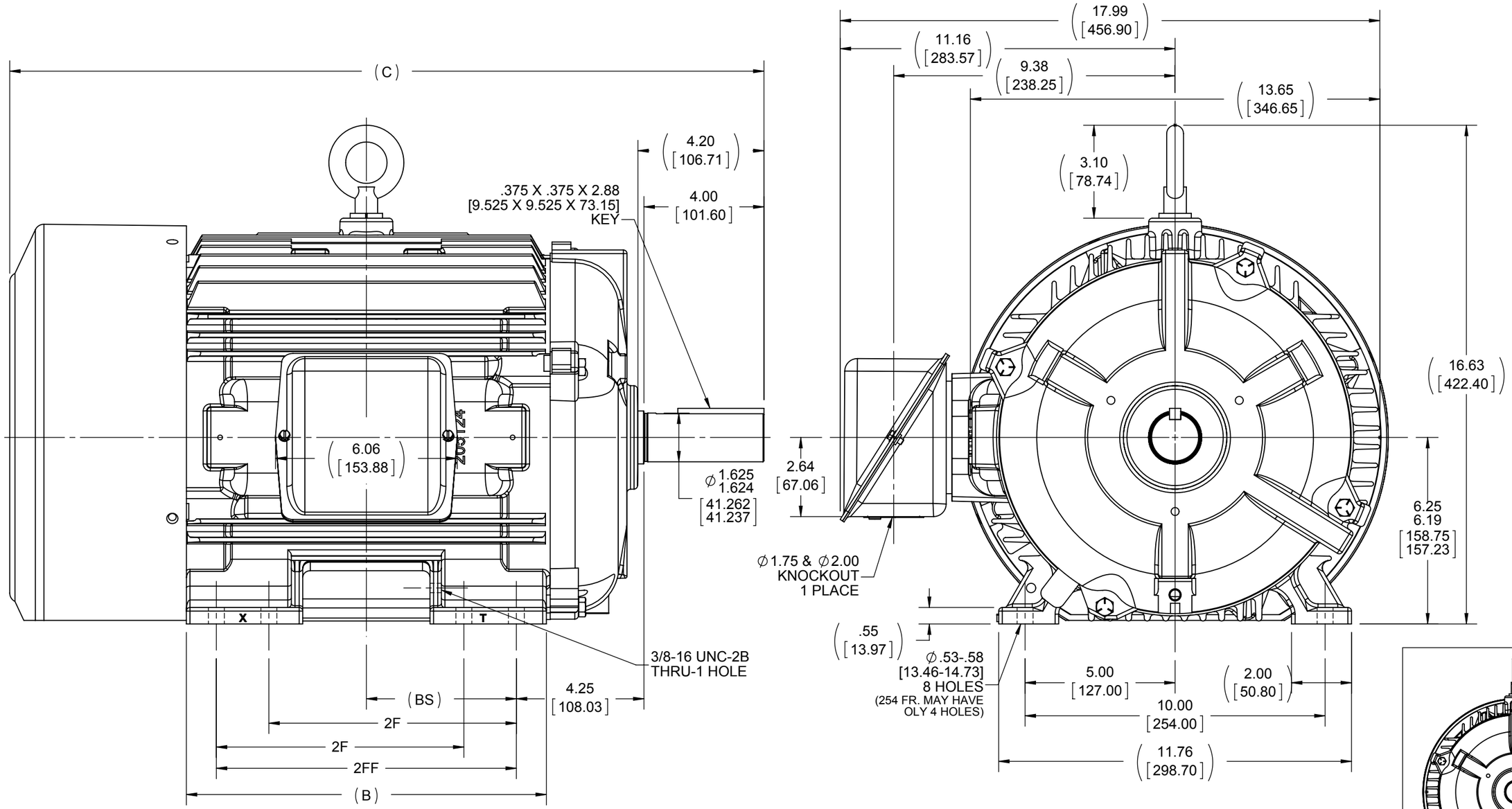

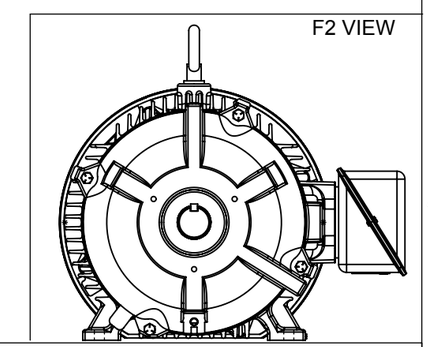

NOTES:
1. BOX CAN BE ROTATED ON ITS AXIS.
2. BOX CAN BE MOUNTED ON OPPOSITE SIDE BY REMOVING BRACKETS AND TURNING FRAME 180°
3. NAMEPLATE TO BE READ FROM CONDUIT BOX SIDE OF MOTOR

DASH	FRAME	B	C	2F	2FF	BS
1050	254T	10.25 [260.35]	23.52 [597.41]	-	8.25 [209.55]	4.12 [104.65]
1225	256T	12.00 [304.80]	25.27 [641.86]	8.25 [209.55]	10.00 [254.00]	5.00 [127.00]

DRAWING REVISION	REVISION BY	DATE
F	DF	7-7-14
ECO: ECO-0054340	APPROVED BY	DATE
ECO DESCRIPTION: NMR-0060600, MU117685		

COPYRIGHT REGAL BELOIT AMERICA, INC. ALL RIGHTS RESERVED.
PROPRIETARY AND CONFIDENTIAL INFORMATION - THIS DOCUMENT IS THE PROPERTY OF REGAL BELOIT AMERICA, INC. ("OWNER") AND CONTAINS OWNER'S PROPRIETARY INFORMATION. ANY PERSON, CORPORATION OR OTHER FIRM RECEIVING IT IS DEEMED, BY RECEIVING IT, TO AGREE THAT IT, AND/OR ANY PART OF IT, SHALL NOT BE DISCLOSED TO ANY PERSON, CORPORATION OR OTHER ENTITY, DUPLICATED, AND/OR USED, EXCEPT AS EXPRESSLY APPROVED IN WRITING IN ADVANCE BY OWNER. THIS DOCUMENT SHALL BE RETURNED TO OWNER UPON REQUEST. IT MAY BE SUBJECT TO CERTAIN RESTRICTIONS UNDER APPLICABLE EXPORT CONTROL LAWS AND REGULATIONS.

TOLERANCES UNLESS OTHERWISE SPECIFIED:

DEC.	INCH	mm	ANGLE
.X	±0.1	[±2.5]	±7' 30"
.XX	±0.03	[±0.76]	
XXX	±0.005	[±0.127]	
.XXXX	±0.0005	[±0.0127]	

REMOVE BURRS & BREAK SHARP EDGES: .003/.015 [.076/.381]
CORNER FILLETS: .02 [.51]
MACHINED SURFACES: 200 INCH / 5.1 mm
mm SHOWN IN [BRACKETS]

DRAWN BY	D.FROEHLICH
DATE	7-2-14
APPROVED BY	TB
DATE	7-7-14
REFERENCE	
THIRD ANGLE PROJECTION	

REGAL™ Regal Beloit America, Inc.

DESCRIPTION: OUTLINE
250T FR. - BB - TS - STD.

MATERIAL | PROCESS/FINISH

SIZE: B | DRAWING NUMBER: SS203015 | SHEET: 1 OF 1