Uncontrolled Copy

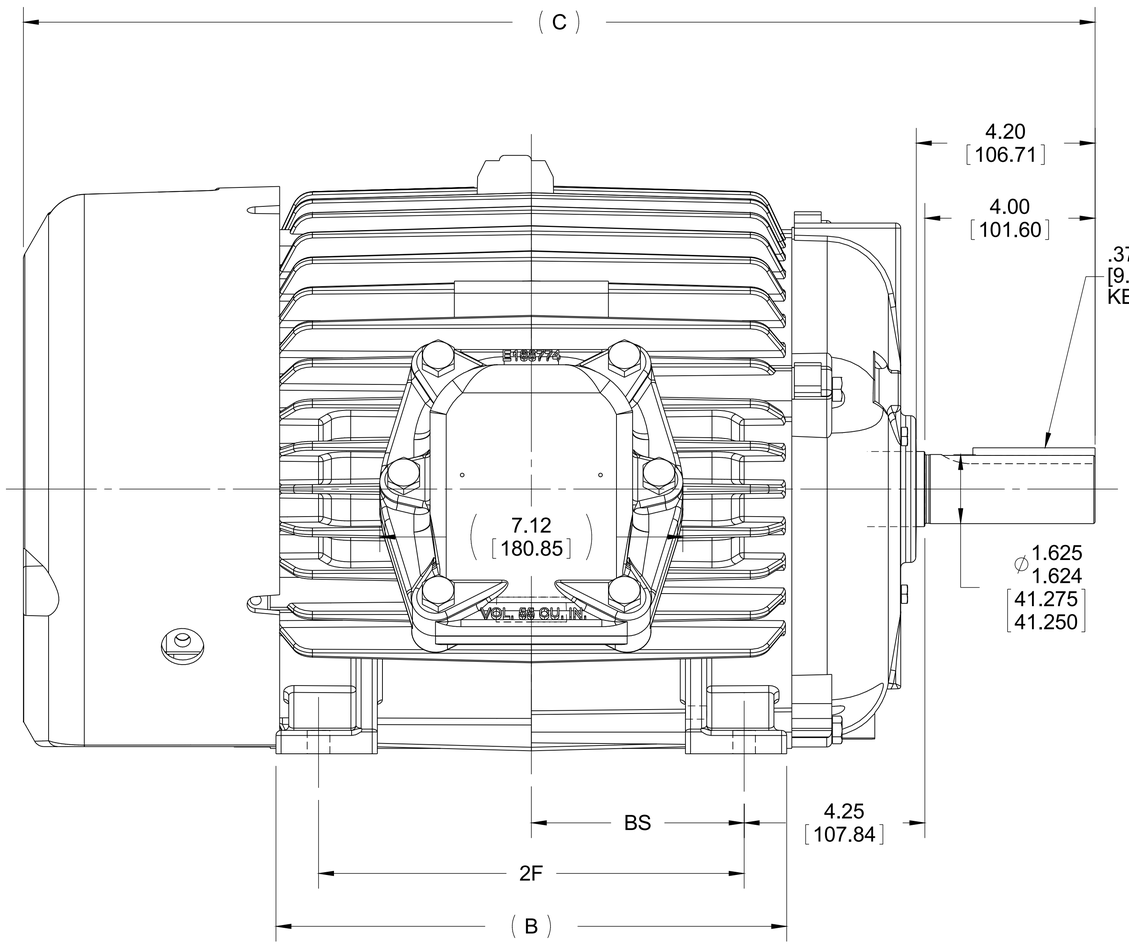

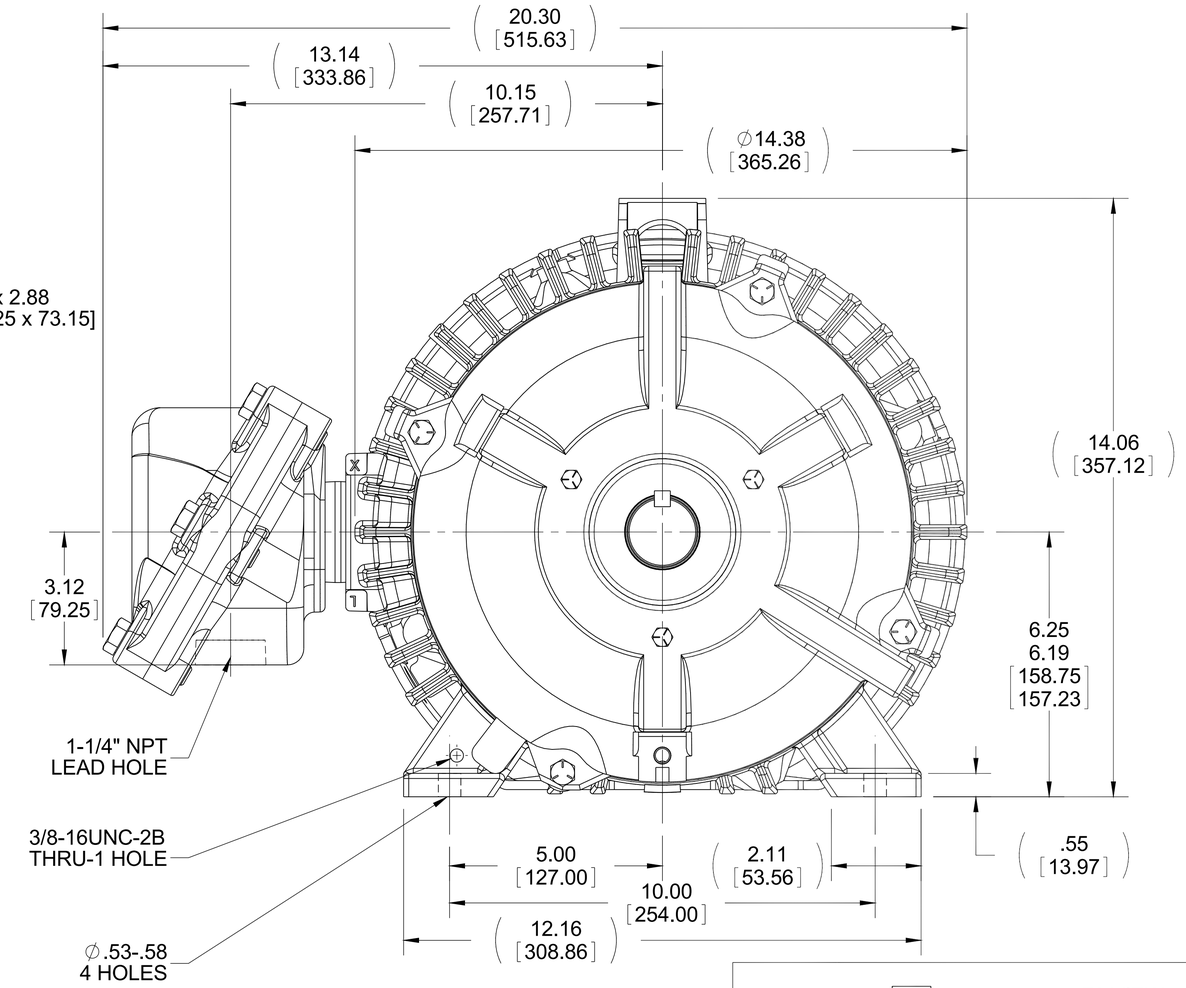

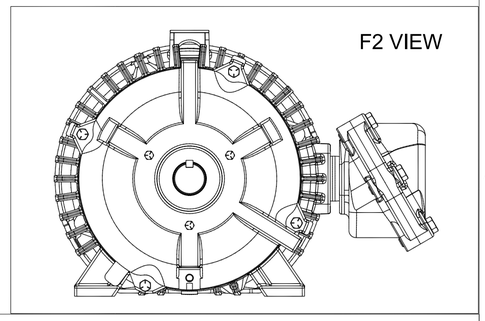

NOTES:
1. CONDUIT BOX CAN ONLY BE ROTATED CLOCKWISE UP TO 270° FROM ITS ORIGINAL POSITION.
2. NAMEPLATES TO BE READ FROM CONDUIT BOX SIDE OF MOTOR.

DASH	FRAME	B	C	2F	2FF	BS
1050	254T	10.25 [260.35]	23.52 [597.71]	---	8.25 [209.55]	4.12 [104.65]
1225	256T	12.00 [304.80]	25.27 [641.86]	---	10.00 [254.00]	5.00 [127.00]

DRAWING REVISION	REVISION BY	DATE
E	JWO	08-06-2015
ECO: ECO-0083060	APPROVED BY	DATE

ECO DESCRIPTION: REVISED C DIMENSION

COPYRIGHT REGAL BELOIT AMERICA, INC. ALL RIGHTS RESERVED.
PROPRIETARY AND CONFIDENTIAL INFORMATION - THIS DOCUMENT IS THE PROPERTY OF REGAL BELOIT AMERICA, INC. ("OWNER") AND CONTAINS OWNER'S PROPRIETARY INFORMATION. ANY PERSON, CORPORATION OR OTHER FIRM RECEIVING IT IS DEEMED, BY RECEIVING IT, TO AGREE THAT IT, AND/OR ANY PART OF IT, SHALL NOT BE DISCLOSED TO ANY PERSON, CORPORATION OR OTHER ENTITY, DUPLICATED, AND/OR USED, EXCEPT AS EXPRESSLY APPROVED IN WRITING IN ADVANCE BY OWNER. THIS DOCUMENT SHALL BE RETURNED TO OWNER UPON REQUEST. IT MAY BE SUBJECT TO CERTAIN RESTRICTIONS UNDER APPLICABLE EXPORT CONTROL LAWS AND REGULATIONS.

TOLERANCES UNLESS OTHERWISE SPECIFIED:

DEC.	INCH	mm	ANGLE
.X	±0.1	[±2.5]	±7' 30"
.XX	±0.03	[±0.76]	
XXX	±0.005	[±0.127]	
.XXXX	±0.0005	[±0.0127]	

REMOVE BURRS & BREAK SHARP EDGES: .003/.015 [.076/.381]
CORNER FILLETS: .02 [.51]
MACHINED SURFACES: 200 INCH / 5.1 mm
mm SHOWN IN [BRACKETS]

DRAWN BY	RM
DATE	12-14-1993
APPROVED BY	FG
DATE	12-15-1993
REFERENCE	
THIRD ANGLE PROJECTION	

Regal Beloit America, Inc.

DESCRIPTION: OUTLINE
250T FR. EXP. PR. - BB - TS - STD.

MATERIAL | PROCESS/FINISH

SIZE: B | DRAWING NUMBER: SS203001 | SHEET: 1 OF 1