SS311003

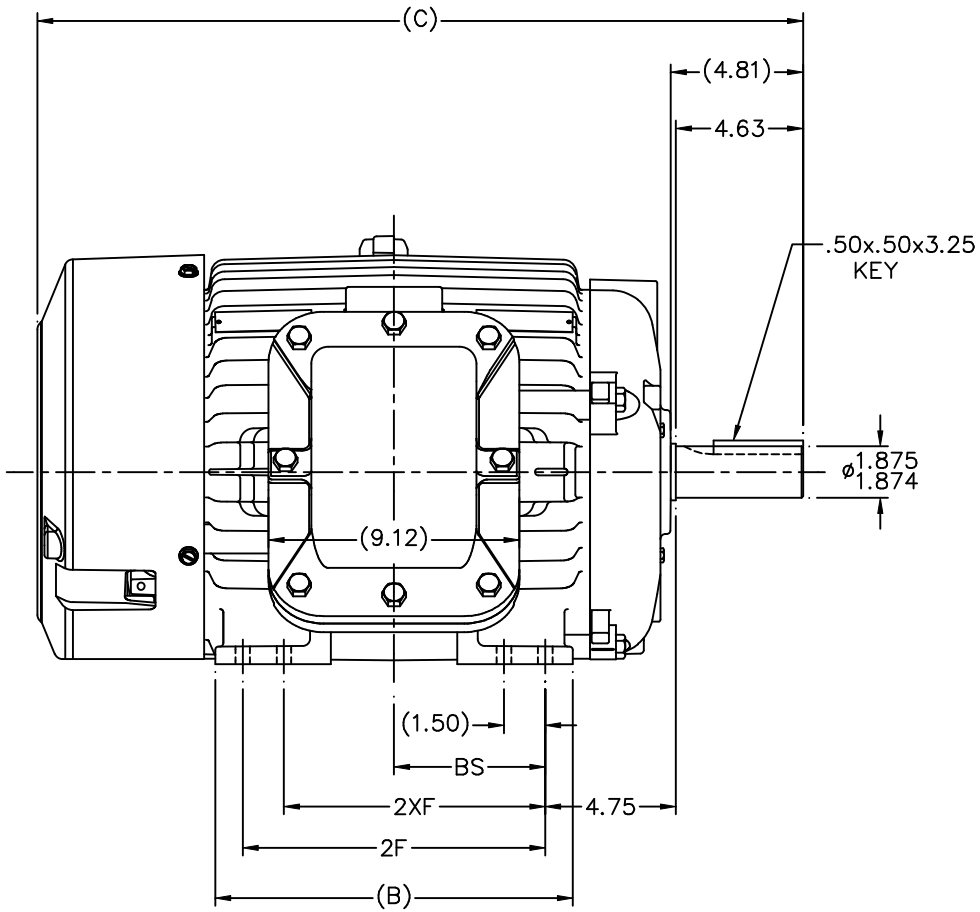

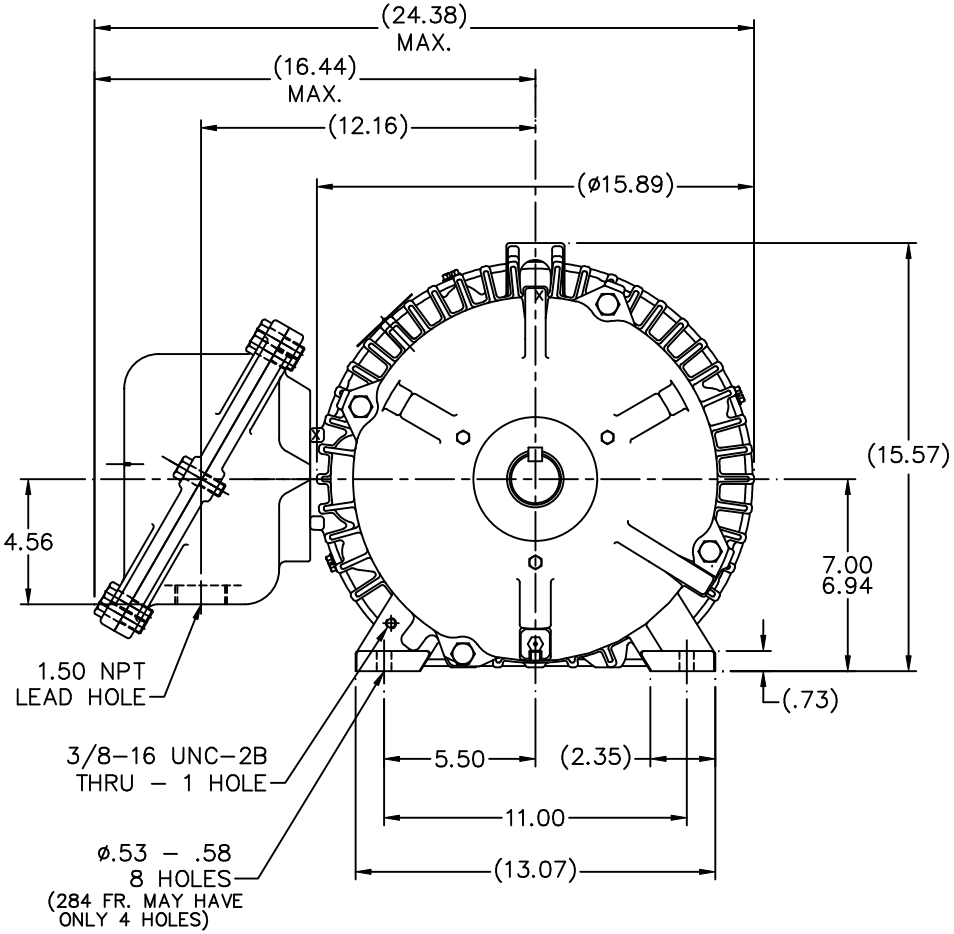

NOTES:
1. BOX CAN ONLY BE ROTATED CLOCKWISE UP TO 270° FROM ITS ORIGINAL POSITION.
2. NAMEPLATE TO BE READ FROM CONDUIT BOX SIDE OF MOTOR.

DASH	FRAME	B	C	2F	2XF	BS
1275	284T	12.50	26.34	9.50		4.75
1425	284/6T	13.00	27.84	11.00	9.50	5.50

NO.	REVISION	BY & DATE	CHK	ANG
5	UPDATED DRAWING	RJW 04-30-2007		
4	ADDED 284 FRAME TO DASH 1425 MU28939	MJD 02-15-2000		
3	UPDATED C'BOX GEOMETRY PER CASTING			
	CHANGE CN29010	DRS 01-31-2000		
2	REV'D. 'C' DIM. FOR C.I. FAN GUARD			
	REV'D. CONDUIT BOX CN27400-239	DA 07-12-1999		

TOLERANCES UNLESS SPECIFIED

DEC.	INCHES
.X	±.1
.XX	±.03
.XXX	±.005
.XXXX	±.0005
ANG	±7'30"

MARATHON ELECTRIC

TITLE OUTLINE – EXP. PR. – TGN
280T FR. – BB – STD – 12.50 LAM.

MAT'L.

FINISH

CAD FILE SS311003

RFP

DIST LB–BR

DRAWN	DA 03-12-1999
CHK	ML 04-15-1999
APPD	SW 04-15-1999
SCALE	1=4.5
REF	
FMF	
PREV	

SIZE	DRAWING NO.	PAGE OF	REV.
B	SS311003		5

THIS DRAWING IN DESIGN AND DETAIL IS OUR PROPERTY AND MUST NOT BE USED EXCEPT IN CONNECTION WITH OUR WORK ALL RIGHTS OF DESIGN AND INVENTION ARE RESERVED
THIS IS AN ELECTRONICALLY GENERATED DOCUMENT – DO NOT SCALE THIS PRINT