Uncontrolled Copy

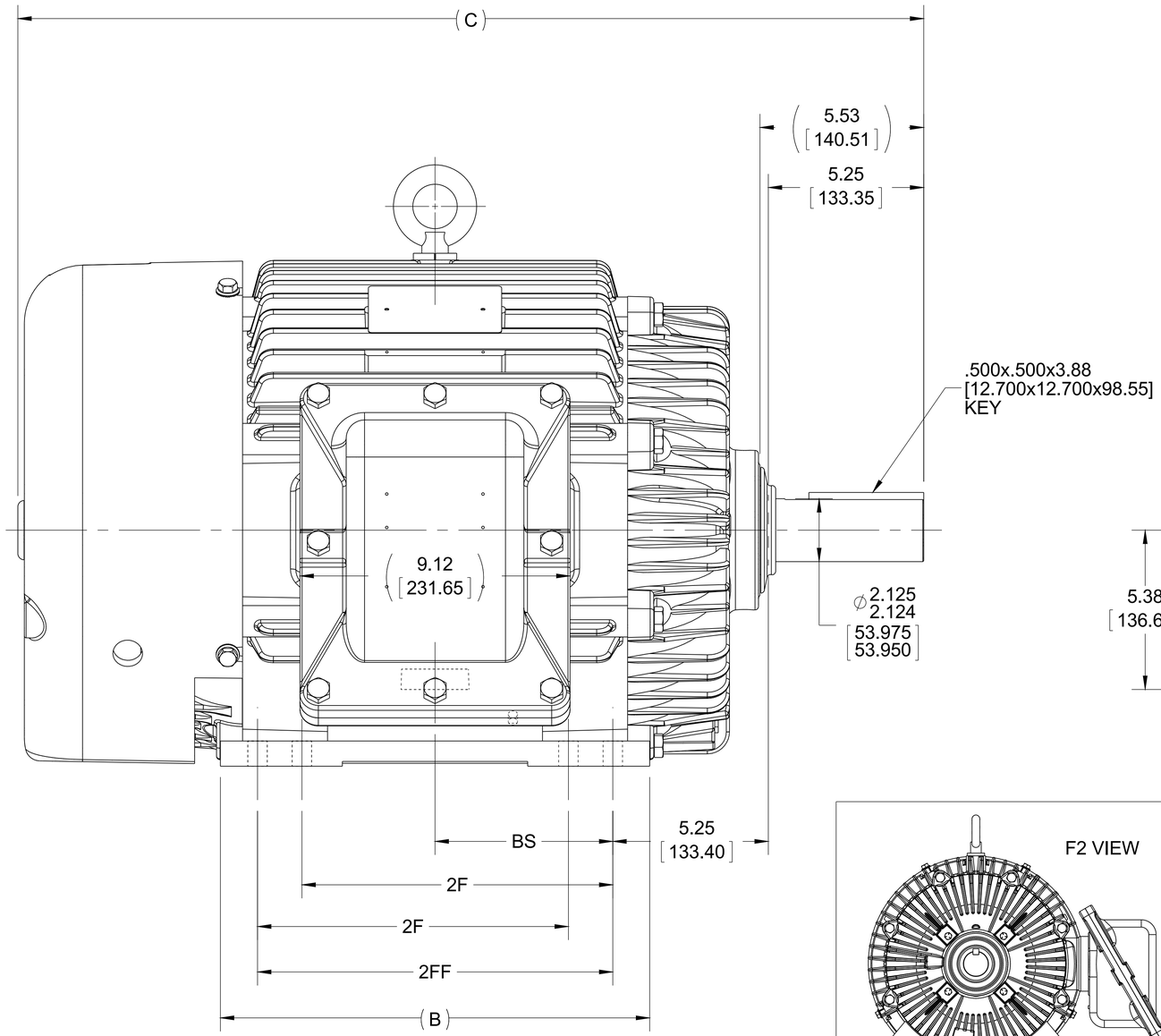

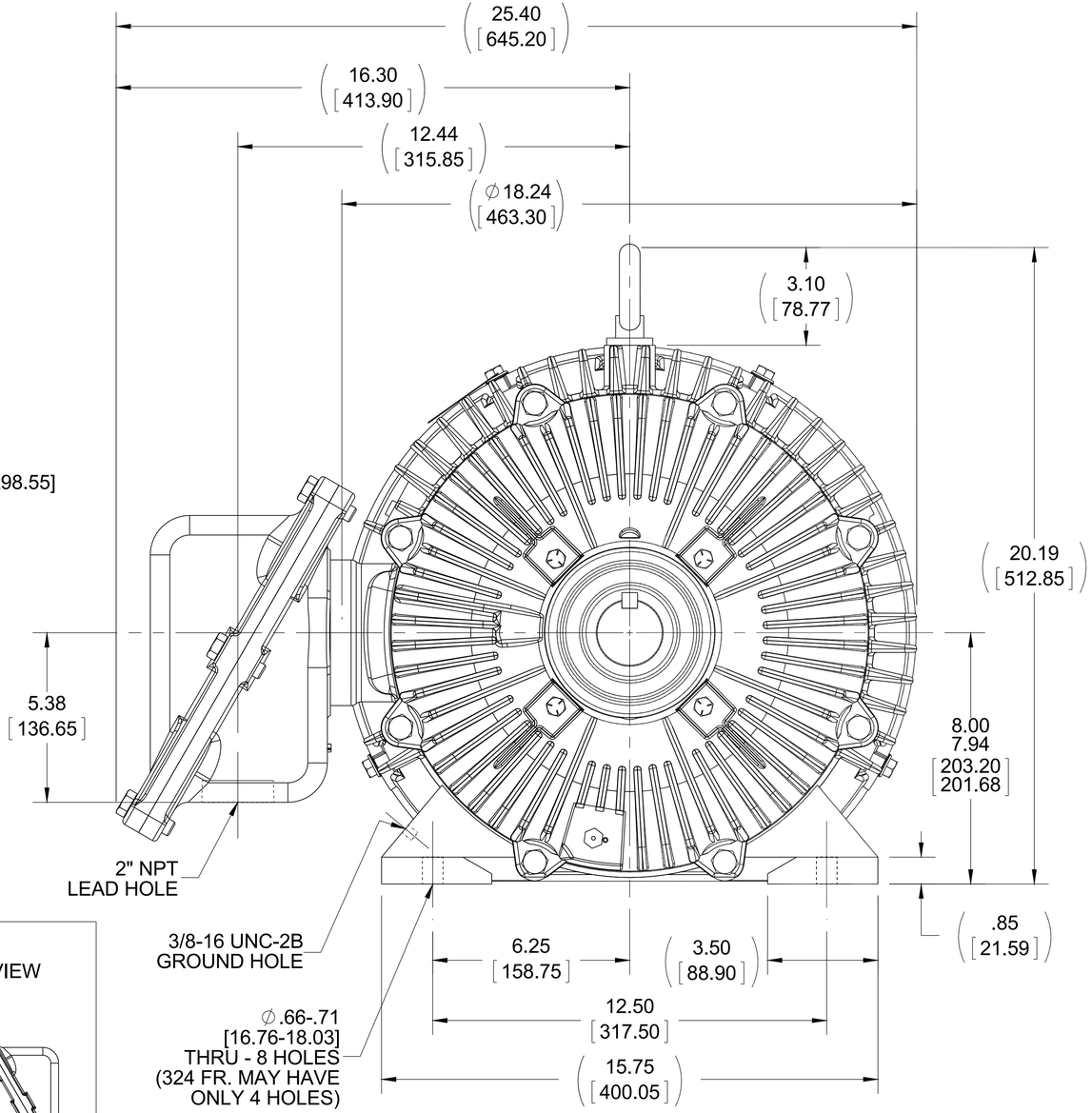

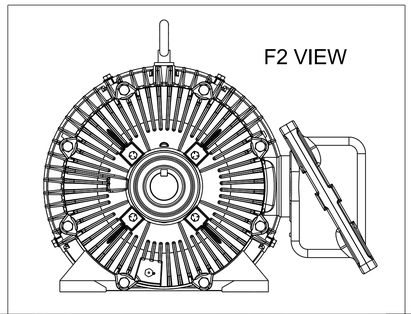

NOTES:
1. CONDUIT BOX CAN BE ROTATED IN 90° STEPS.
2. CONDUIT BOX CAN BE MOUNTED ON OPPOSITE SIDE BY REMOVING BRACKETS AND TURNING FRAME 180°.
3. NAMEPLATE READ FROM CONDUIT BOX SIDE OF MOTOR.

DASH	FRAME	C	B	2F	2FF	BS
1150	324T	29.10 [739.14]	13.00 [330.20]	- - -	10.50 [266.70]	5.25 [133.35]
1300	324/326T	30.60 [777.16]	14.50 [368.30]	10.50 [266.70]	12.00 [304.80]	6.00 [152.51]

DRAWING REVISION	REVISION BY	DATE
N	MSG	08-24-2016
ECO: ECO-0108147	APPROVED BY: DR	DATE: 08-25-2016

ECO DESCRIPTION: REVISED DRAWING TO CURRENT STANDARDS

COPYRIGHT REGAL BELOIT AMERICA, INC. ALL RIGHTS RESERVED.
PROPRIETARY AND CONFIDENTIAL INFORMATION - THIS DOCUMENT IS THE PROPERTY OF REGAL BELOIT AMERICA, INC. ("OWNER") AND CONTAINS OWNER'S PROPRIETARY INFORMATION. ANY PERSON, CORPORATION OR OTHER FIRM RECEIVING IT IS DEEMED, BY RECEIVING IT, TO AGREE THAT IT, AND/OR ANY PART OF IT, SHALL NOT BE DISCLOSED TO ANY PERSON, CORPORATION OR OTHER ENTITY, DUPLICATED, AND/OR USED, EXCEPT AS EXPRESSLY APPROVED IN WRITING IN ADVANCE BY OWNER. THIS DOCUMENT SHALL BE RETURNED TO OWNER UPON REQUEST. IT MAY BE SUBJECT TO CERTAIN RESTRICTIONS UNDER APPLICABLE EXPORT CONTROL LAWS AND REGULATIONS.

TOLERANCES UNLESS OTHERWISE SPECIFIED:

DEC.	INCH	mm	ANGLE
.X	±0.1	[±2.5]	±7' 30"
.XX	±0.03	[±0.76]	
.XXX	±0.005	[±0.127]	
.XXXX	±0.0005	[±0.0127]	

REMOVE BURRS & BREAK SHARP EDGES: .003/.015 [.076/.381] X 45°
CORNER FILLETS: R.02 [.51]
MACHINED SURFACES: 200 INCH / 5.1 mm
mm SHOWN IN [BRACKETS]

DRAWN BY	DJK
DATE	04-30-1993
APPROVED BY	GK 05-04-1993
DATE	
REFERENCE	
THIRD ANGLE PROJECTION	

Regal Beloit America, Inc.

DESCRIPTION: OUTLINE
320T FR. - EPFC - BB - TS

MATERIAL | PROCESS/FINISH

SIZE: B | DRAWING NUMBER: SS28022 | SHEET: 1 OF 1