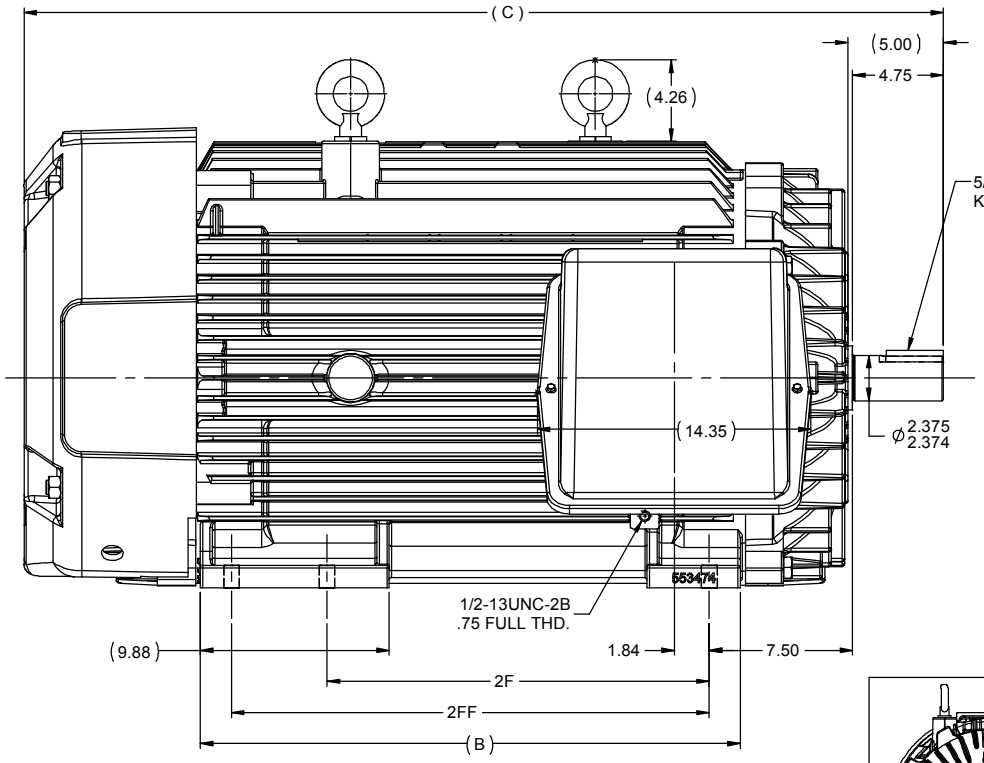

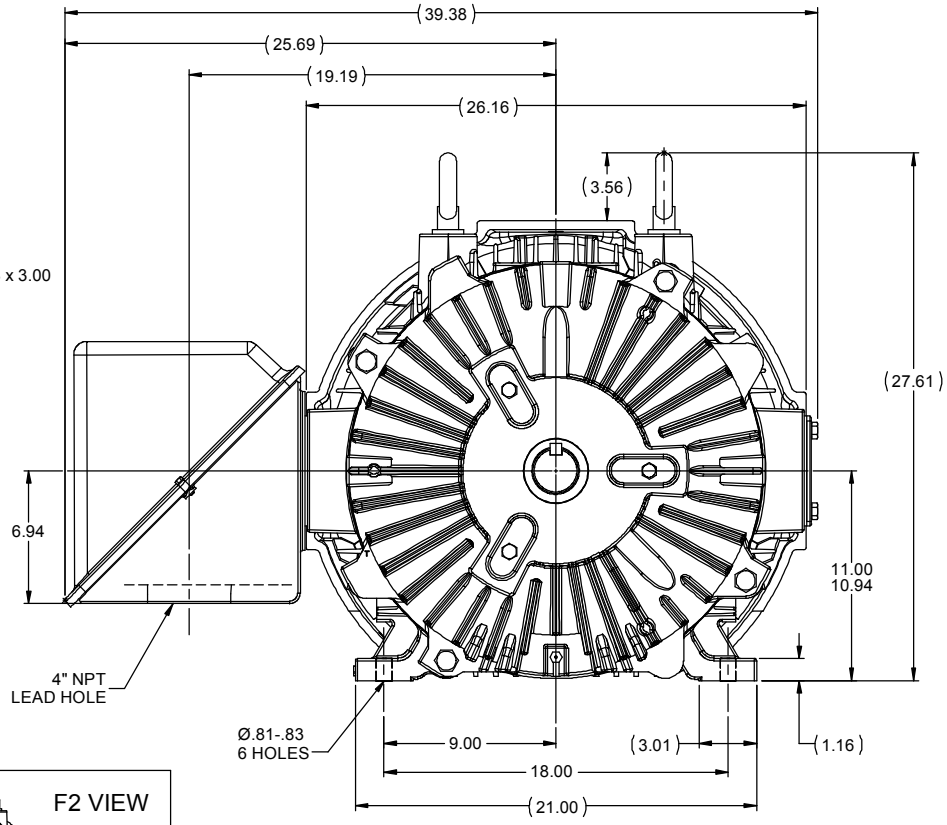

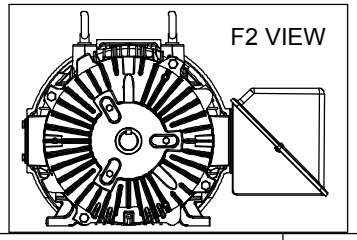

NOTES:

1. C'BOX CAN BE ROTATED IN 90° SETPS.

2. NAMEPLATES TO BE READ FROM C'BOX SIDE OF MOTOR.

DASH	FRAME	C	B	2F	2XF
2875	447TS	48.09	28.25	20.00	- - -
2875	449TS	48.09	28.25	- - -	25.00

NO	REVISION	BY & DATE	CHK
6	UPDATED FRAME TO CURRENT STD'S. MU108818	JJB 7/16/2012	MH
5	UPDATED TO SOLIDWORKS, AND UPDATED FRAME	CJR 2/15/2012	SSW
4	REVISED FAN GAURD MU76102	RJW 11-6-6	ML
3	UPDATED C'BOX GEMETRY CN28404	DRS 11-4-02	
2	ADD GRD.PADS&HOLES TO FRAME PER CN21725-983	KL 4-6-97	
1	NEW DRAWING CN22247	BLR 6-19-96	

TOLERANCES UNLESS SPECIFIED

DEC	INCHES
.X	±.1
.XX	±.03
.XXX	±.005
.XXXX	±.0005
ANG	±7'30"

marathon electric

TITLE OUTLINE- TEFC
447/9TS FR.- STD- TAPPED LEAD HOLE

MAT'L
FINISH

DRAWN	BLR 06-14-1996
CHK	MRB 06-16-1996
APPR	JL 06-16-1996
SCALE	1:6.5
REF	
FMF	
PAGE	OF

THIRD ANGLE PROJECTION

RFP
PREV
NETWORK FILE NAME SS515689

SIZE B
DRAWING NO SS515689
REV 6

7/16/2012 10:39:42 AM - Converted by Connexus