169554-60ME

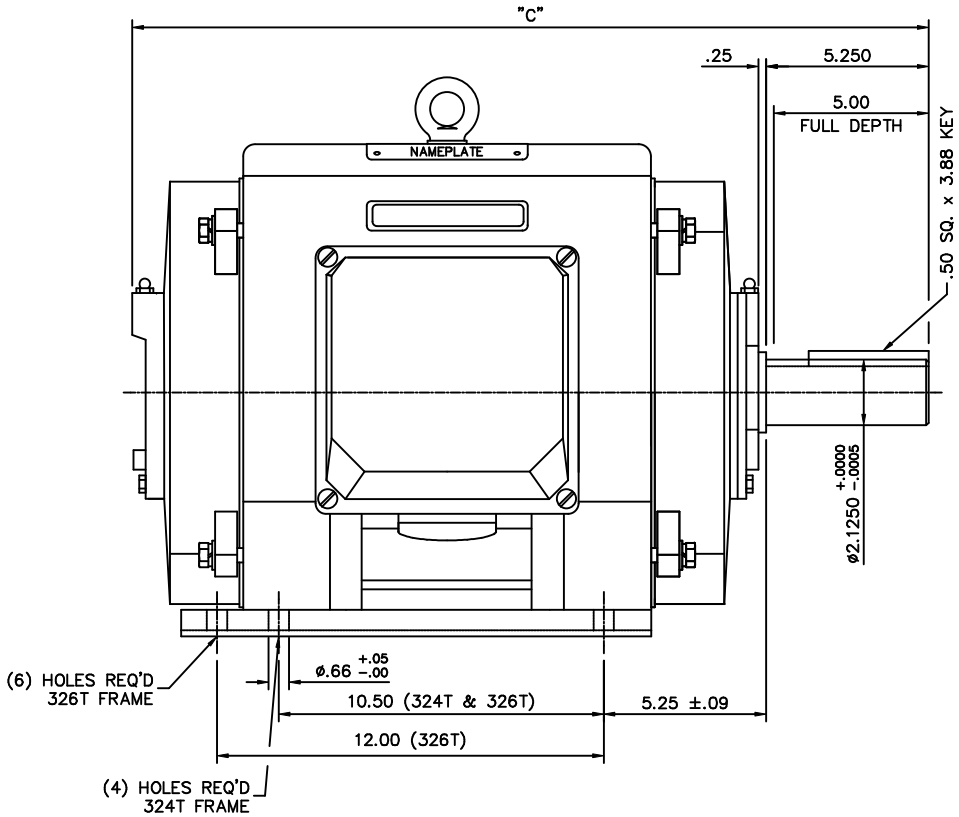

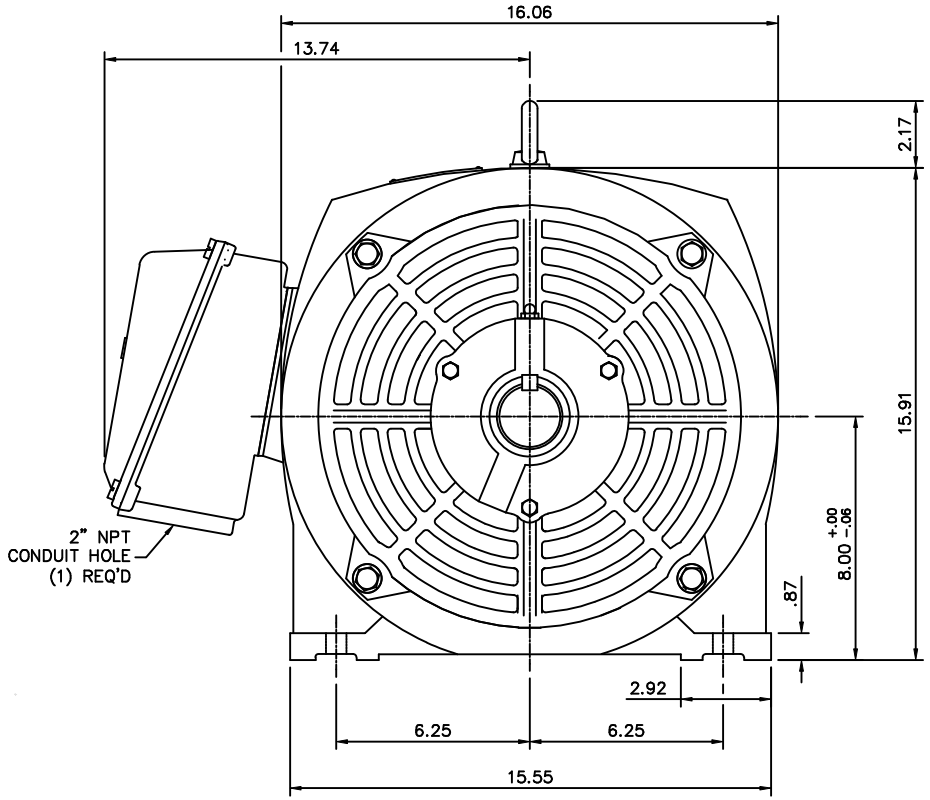

FRAME DESIGN	"C"
324T	26.02
326T	27.52

NO.	REVISION	BY & DATE
1	NEW DRAWING	CTO 05/21/02

TOLERANCES UNLESS SPECIFIED

DEC.	INCHES
.X	±.1
.XX	±.03
.XXX	±.005
.XXXX	±.0005
ANG	±1/2°

CHK

MARATHON ELECTRIC

TITLE: OUTLINE 320T FRAME DRIP PROOF – RIGID

MAT'L. CAST IRON

FINISH

CAD FILE 16955460me

RFP

DIST

DRAWN CTO 04-25-2002
CHK ML 05-20-2002
APPD SB 05-21-2002
SCALE 1=1
REF
FMF
PREV

SIZE B | DRAWING NO. 169554-60ME | REV. 1

THIS DRAWING IN DESIGN AND DETAIL IS OUR PROPERTY AND MUST NOT BE USED EXCEPT IN CONNECTION WITH OUR WORK ALL RIGHTS OF DESIGN AND INVENTION ARE RESERVED
THIS IS AN ELECTRONICALLY GENERATED DOCUMENT – DO NOT SCALE THIS PRINT