36LYG967

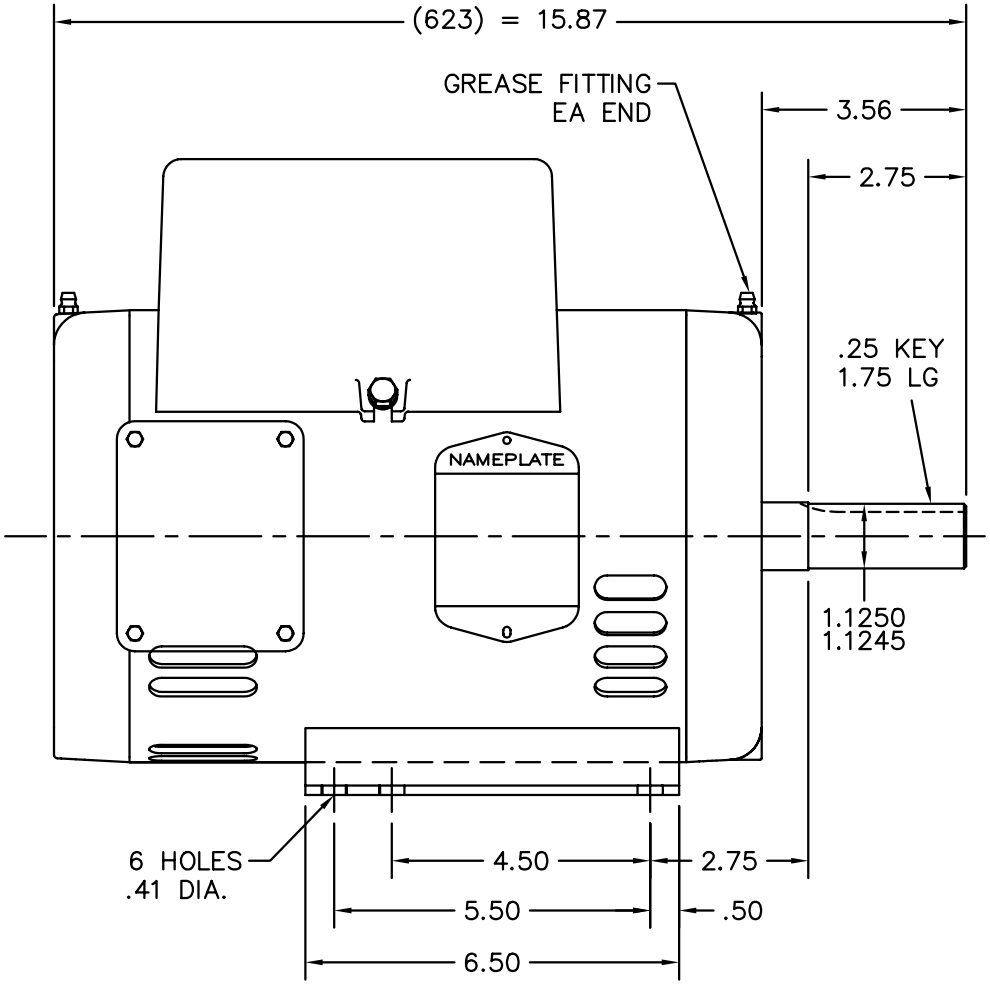

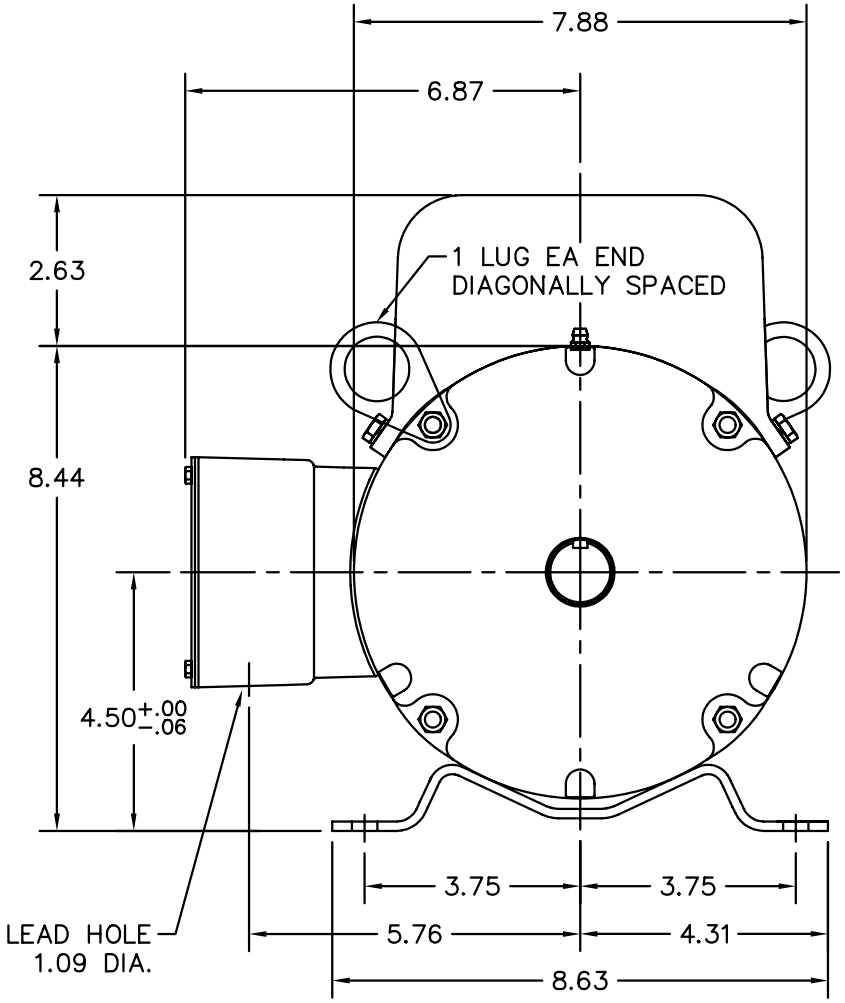

CUST. NAME		CUST. P.O.		CERTIFIED BY	MODEL		INSUL	AMB
H.P.	MTG	TYPE	R.P.M.	VOLTS	ENCL	PHASE	FREQ	FRAME
REV. DESC: CHG'D CONDUIT BOX (SEE EC09)					BALDOR ELECTRIC Co.			
REV. LTR: D	BY: JED	REVISED: 01/27/99 4:07		TDR: 0171563				
36LYG967		FILE: AAA00015230		MDL: –	HORZ OPEN 182–4T 36LC SLOT BAND (623 ONLY)			
		MTL: –						

36LYG967