36LYH982

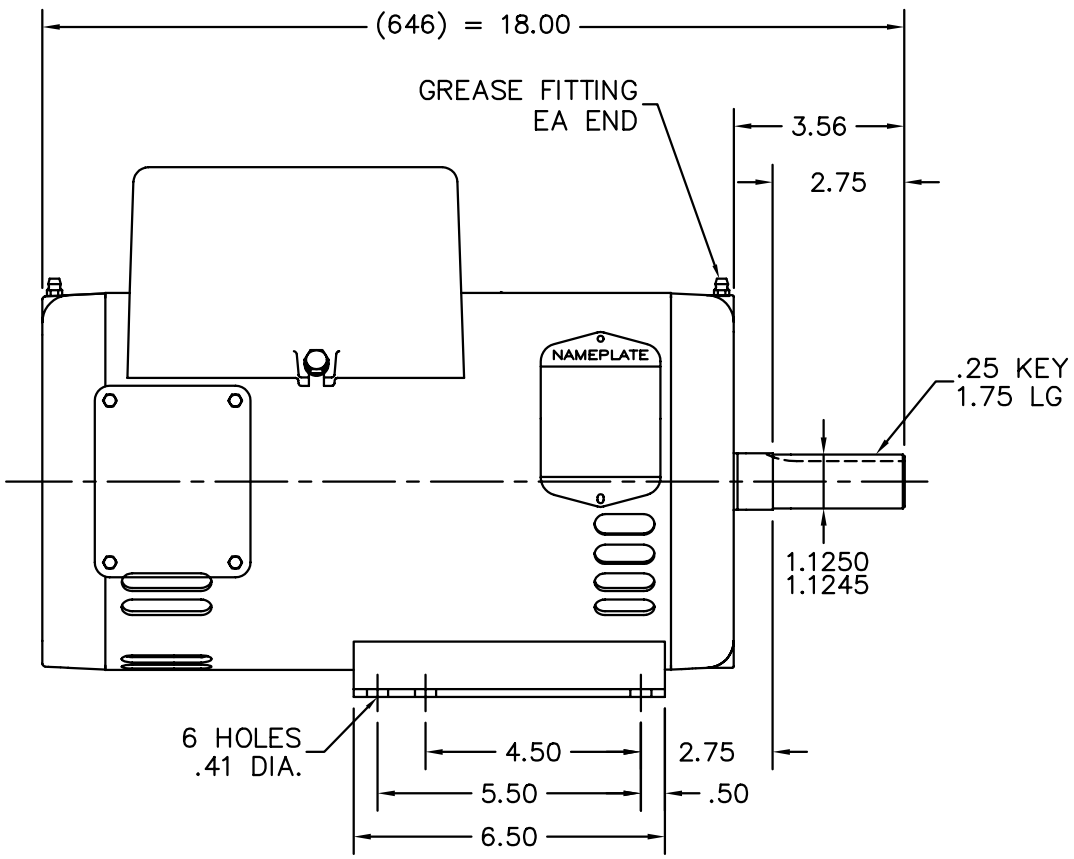

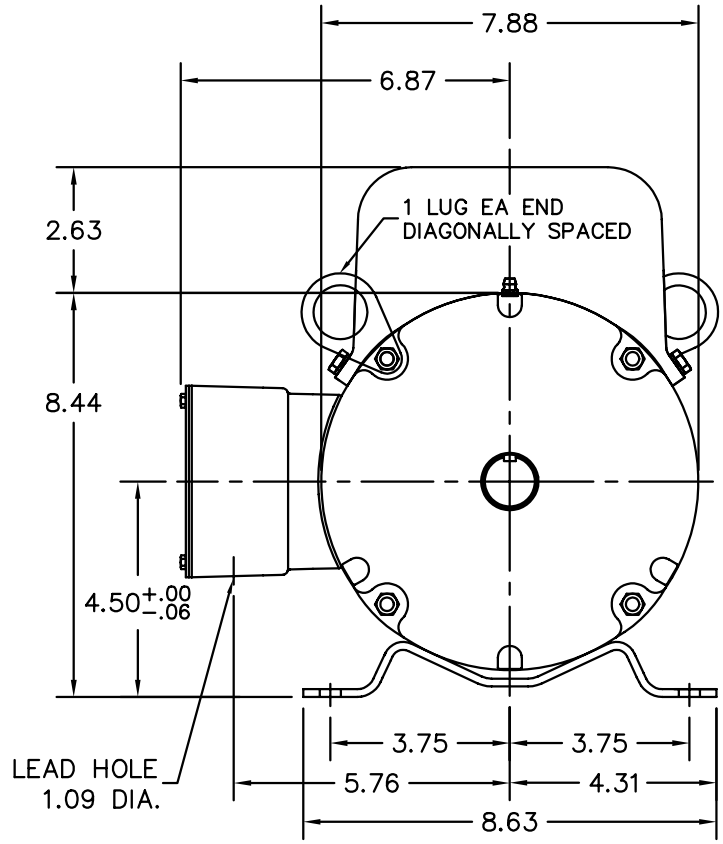

CUST. NAME		CUST. P.O.		CERTIFIED BY		MODEL		INSUL	AMB
H.P.	MTG	TYPE	R.P.M.	VOLTS	ENCL	PHASE	FREQ	FRAME	
REV. DESC: CHG'D CONDUIT BOX (SEE EC09)					BALDOR ELECTRIC Co.				
REV. LTR: A	BY: JED	REVISED: 01/28/99 10:07		TDR: 0171563					
36LYH982		FILE: AAA00053016		MDL: –	HORZ 182–4T OPSB 36LC (646 ONLY)				
		MTL: –							

36LYH982