SS403588

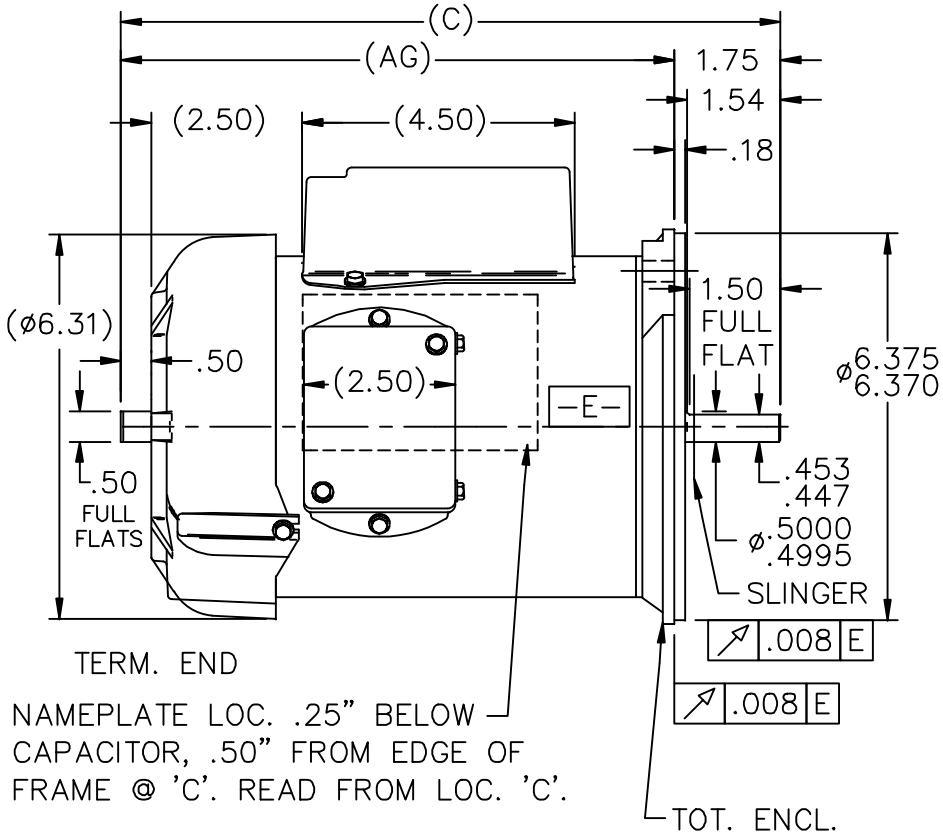

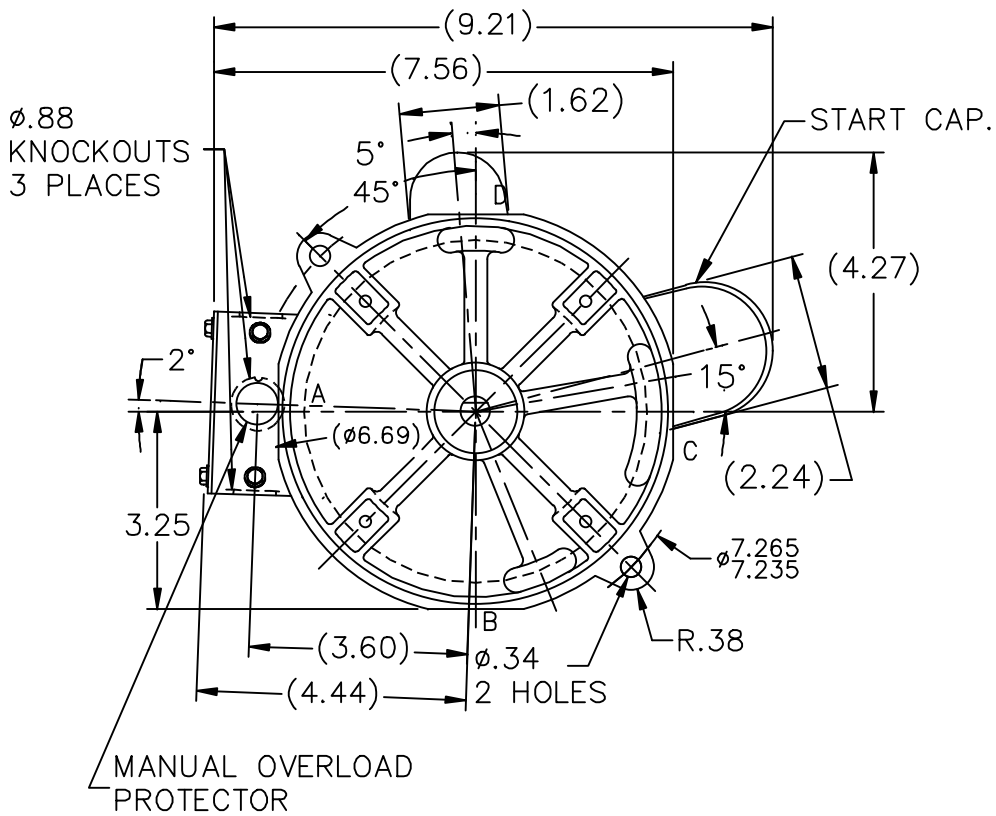

DASH	FRAME	C	AG	
600		10.31	8.66	
625		10.56	8.91	
700		11.31	9.66	

NO.	REVISION	BY & DATE	CHK
01	UPDATED AS PER ECN # 26068	UD 10/09/12	PI

TOLERANCES UNLESS SPECIFIED

DEC.	INCHES
.X	±.1
.XX	±.03
.XXX	±.005
.XXXX	±.0005
ANG	±7'30"

MARATHON ELECTRIC

TITLE OUTLINE
48 FRAME N FLANGE

MAT'L.

FINISH

CAD FILE SS403588

RFP

DIST WP

DRAWN	VL 01-19-2007
CHK	NB 01-19-2007
APPD	DN 01-19-2007
SCALE	5=16
REF	SS400351
FMF	MU76777
PREV	ME060038

SIZE A | DRAWING NO. SS403588 | PAGE OF | REV. 01

THIS DRAWING IN DESIGN AND DETAIL IS OUR PROPERTY AND MUST NOT BE USED EXCEPT IN CONNECTION WITH OUR WORK ALL RIGHTS OF DESIGN AND INVENTION ARE RESERVED
THIS IS AN ELECTRONICALLY GENERATED DOCUMENT – DO NOT SCALE THIS PRINT

10/15/2012 5:05:42 AM - Converted by Connexus