SHEET 1 | REV 10 | 52A101469 | DRAWING NO. | SIZE A

THIRD ANGLE PROJECTION

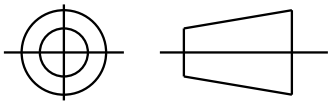

REVISIONS			
REV.	DESCRIPTION	DATE	APPROVED
9	REDRAWN NO CHANGE T196-22390	07/10/96	MDP
10	CHG TO RBC FORMAT PER IS 05-1777	12/15/05	GOVARDAN

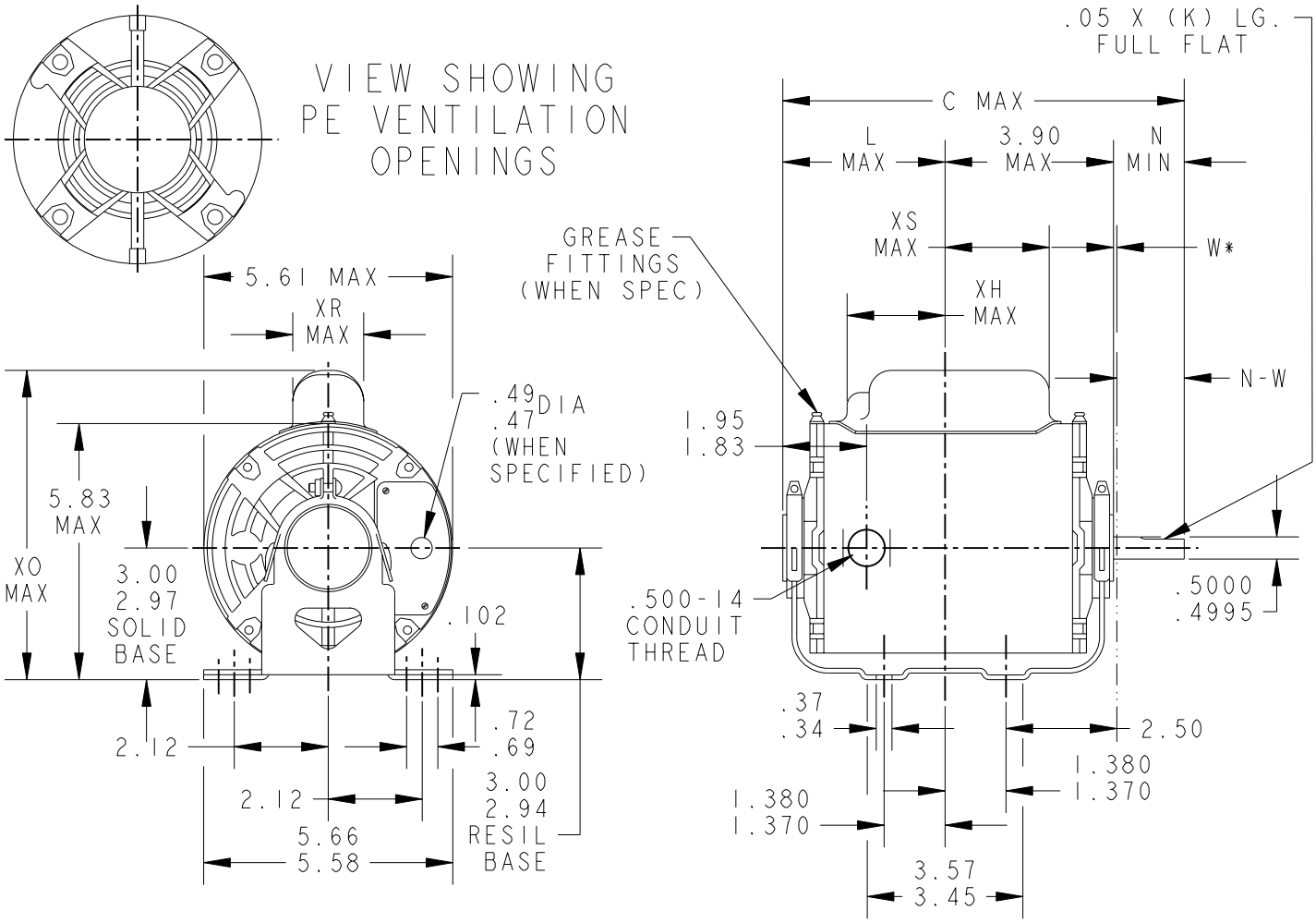

*W IS A CLEARANCE DUE TO VARIATION IN PARTS & ASSEMBLY.

PT	TYPE	GE SIZE	NEMA FR	C	L	XH	XO	XR	XS	N	N-W	K
7	KC	38	48	11.00	5.65	4.02	7.31	1.60	1.75	1.50	1.63/1.41	1.16
6	KC	35	48Z	10.32	4.22	2.59	7.93	2.22	1.97	2.25	2.38/2.16	1.91
5	KC	36	48	10.00	4.65	3.02	7.93	2.22	1.22	1.50	1.63/1.41	1.16
4	KC	37	48	10.40	5.05	3.42	7.31	1.60	2.35	1.50	1.63/1.41	1.16
3	KC	36	48	10.00	4.65	3.02	7.31	1.60	2.35	1.50	1.63/1.41	1.16
2	KC	35	48	9.57	4.22	2.59	7.31	1.60	1.97	1.50	1.63/1.41	1.16
1	KC	33	48	9.19	3.84	2.21	7.31	1.60	2.35	1.50	1.63/1.41	1.16

SIGNATURES		DATE
MODEL	GLB	02/18/75
DETAIL	.	.
CHECKED	.	.
ENGRG	.	.
MFG	.	.
QUALITY	.	.
ISSUED	MDP	07/10/96

SOLID MODEL: 52A101469

FOR ADDITIONAL INFO REFER TO:
APPLIED PRACTICES .
DIMENSIONS ARE IN INCHES ✓
MATERIAL .

REGAL BELOIT

REGAL-BELOIT CORPORATION

TITLE

OUTLINE

FORM N - GENERAL PURPOSE MOTOR - DRIP PROOF - SOLID OR RESIL BASE - BALL OR SLEEVE BEARING

SIZE A | DRAWING 52A101469 | REV 10

SCALE: 1.000 | REF. No: . | SHEET 1 OF 1