100132LE

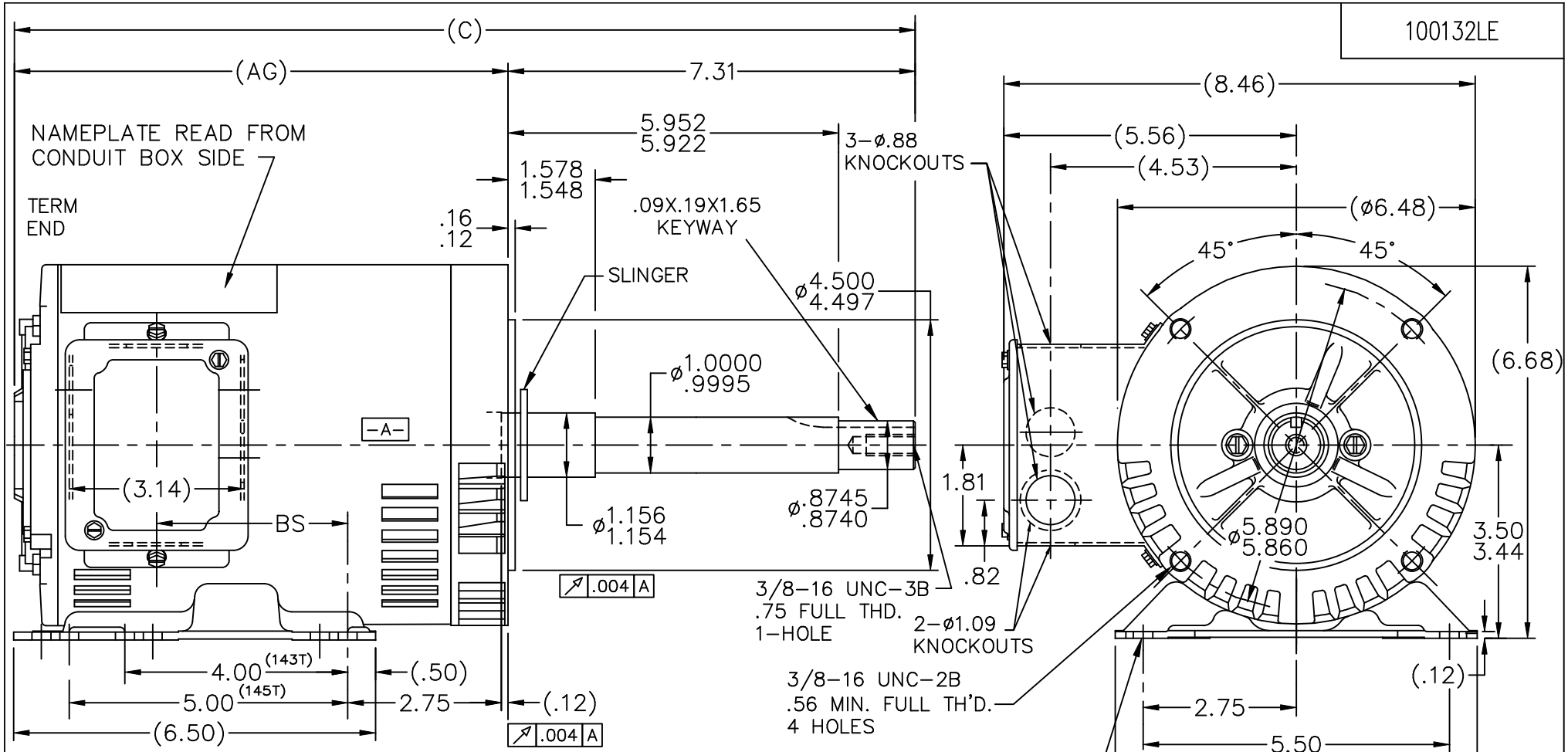

DASH	FR.	C	AG	BS	DASH	FR.	C	AG	BS
					806	140T	17.18	9.87	4.37
706	140T	16.18	8.87	3.37	856	140T	17.68	10.37	4.87
756	140T	16.68	9.37	3.87	906	140T	18.18	10.87	5.37

NOTES: CONDUIT BOX CAN BE ROT. 180

NO.	REVISION	BY & DATE	CHK

TOLERANCES UNLESS SPECIFIED

DEC.	INCHES
.X	±.1
.XX	±.03
.XXX	±.005
.XXXX	±.0005
ANG	±7'30"

LEESON — ELECTRIC MOTORS GEARMOTORS AND DRIVES

TITLE OUTLINE
140 FR.–BB–DR.PR.–3ø–C' FACE–JP EXT.

MAT'L.
FINISH
CAD FILE 100132LE

RFP 08–04–2004
DIST WP

DRAWN	DRS	08–03–2004
CHK	ML	08–04–2004
APPD	GK	08–04–2004
SCALE	3=8	
REF		
FMF		
PREV		

SIZE A | DRAWING NO. 100132LE | PAGE OF | REV.

THIS DRAWING IN DESIGN AND DETAIL IS OUR PROPERTY AND MUST NOT BE USED EXCEPT IN CONNECTION WITH OUR WORK ALL RIGHTS OF DESIGN AND INVENTION ARE RESERVED
THIS IS AN ELECTRONICALLY GENERATED DOCUMENT – DO NOT SCALE THIS PRINT