SS622037LE

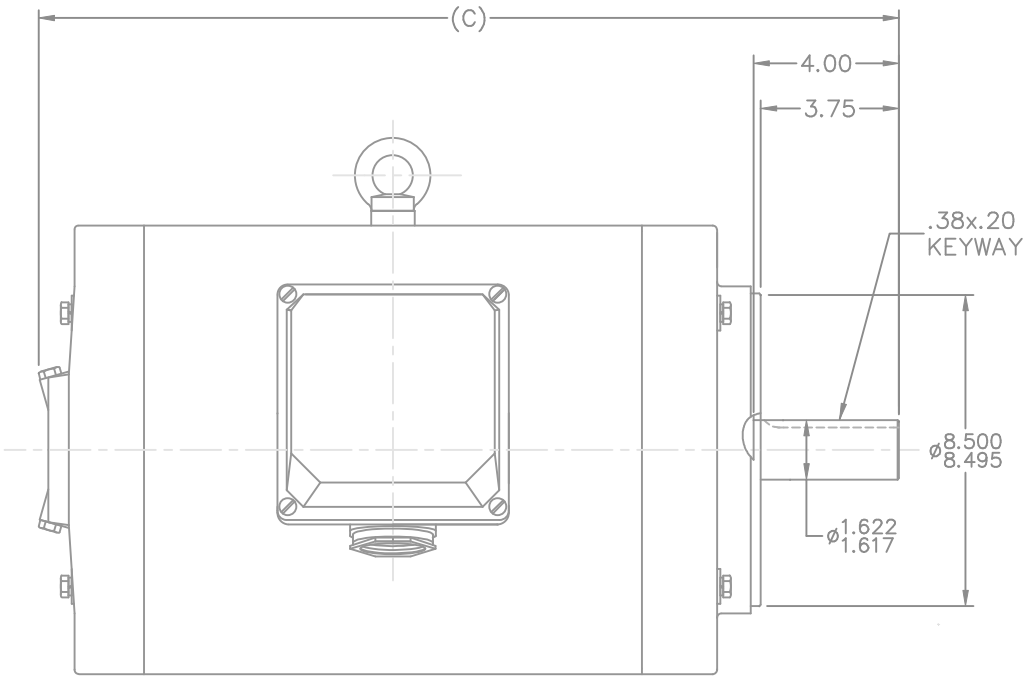

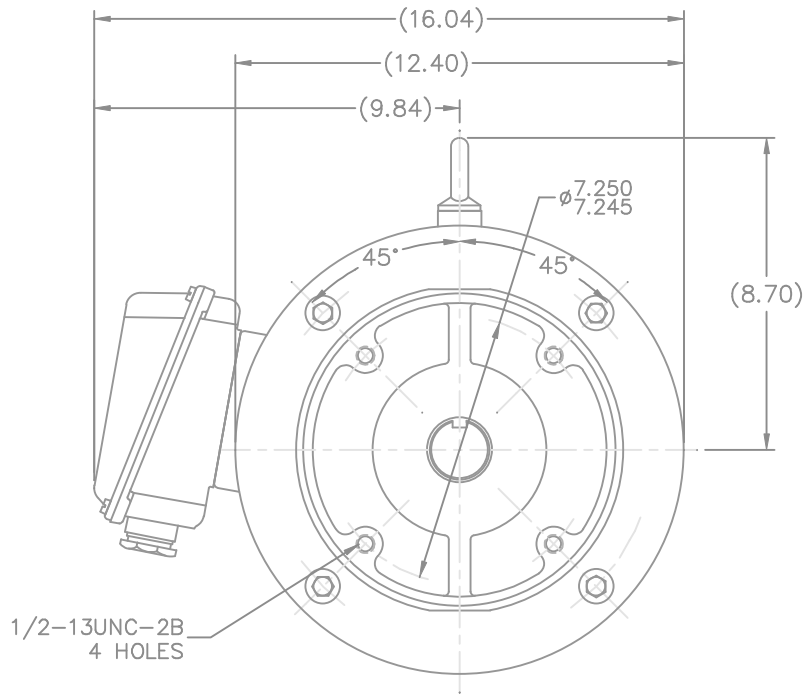

(DRAWING IS NOT TO SCALE)

FRAME	C
N254TC–2	21.38
N254TC–4	21.38
N256TC–2	23.03
N256TC–4	23.03

NO.	REVISION	BY & DATE	CHK

TOLERANCES UNLESS SPECIFIED

DEC.	INCHES
.X	±.1
.XX	±.03
.XXX	±.005
.XXXX	±.0005
ANG	±1/2°

LEESON — ELECTRIC MOTORS GEARMOTORS AND DRIVES

TITLE OUTLINE
N250TCG FRAME –(ODP) –NO BASE

MAT'L.

FINISH

CAD FILE SS622037LE

RFP

DIST

SIZE B

DRAWING NO. SS622037LE

PAGE 1 OF 1

REV.

DRAWN RWR 07–29–2005

CHK ML 08–16–2005

APPD

SCALE 5=18

REF

FMF HE BEI ELEC. MOTR

PREV N250TCG(ODP)N/B

THIS DRAWING IN DESIGN AND DETAIL IS OUR PROPERTY AND MUST NOT BE USED EXCEPT IN CONNECTION WITH OUR WORK ALL RIGHTS OF DESIGN AND INVENTION ARE RESERVED
THIS IS AN ELECTRONICALLY GENERATED DOCUMENT – DO NOT SCALE THIS PRINT