SS622301

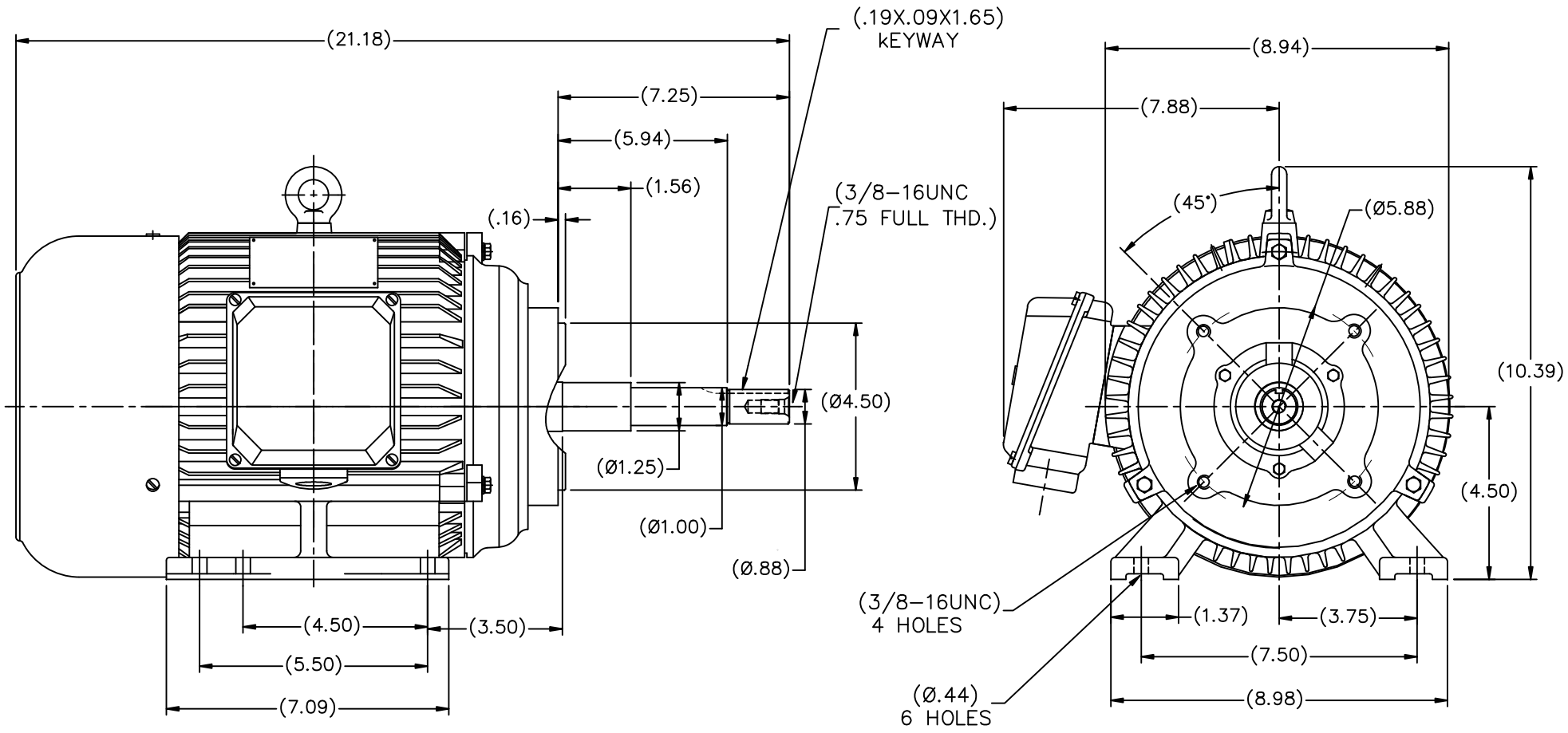

(DRAWING NOT TO SCALE)

				TOLERANCES UNLESS SPECIFIED		REGAL-BELOIT CORPORATION	DRAWN MOL 03–29–2011
				DEC.	METRIC		CHK MOL 03–29–2011
				.X	±2.5		APPD
				.XX	±.76	TITLE OUTLINE	SCALE 1=30
				.XXX	±.127	N180JP – W2 – C FACE – TEFC	REF 20110330
				.XXXX	±.0127	MAT'L.	FMF HEBEI
NO.	REVISION	BY & DATE	CHK	ANG	±7'30"	FINISH	PREV

THIS DRAWING IN DESIGN AND DETAIL IS OUR PROPERTY AND MUST NOT BE USED EXCEPT IN CONNECTION WITH OUR WORK ALL RIGHTS OF DESIGN AND INVENTION ARE RESERVED
THIS IS AN ELECTRONICALLY GENERATED DOCUMENT – DO NOT SCALE THIS PRINT

RFP	CAD FILE SS622301	SIZE	DRAWING NO. PAGE OF	REV.
DIST		B	SS622301	