SS622305

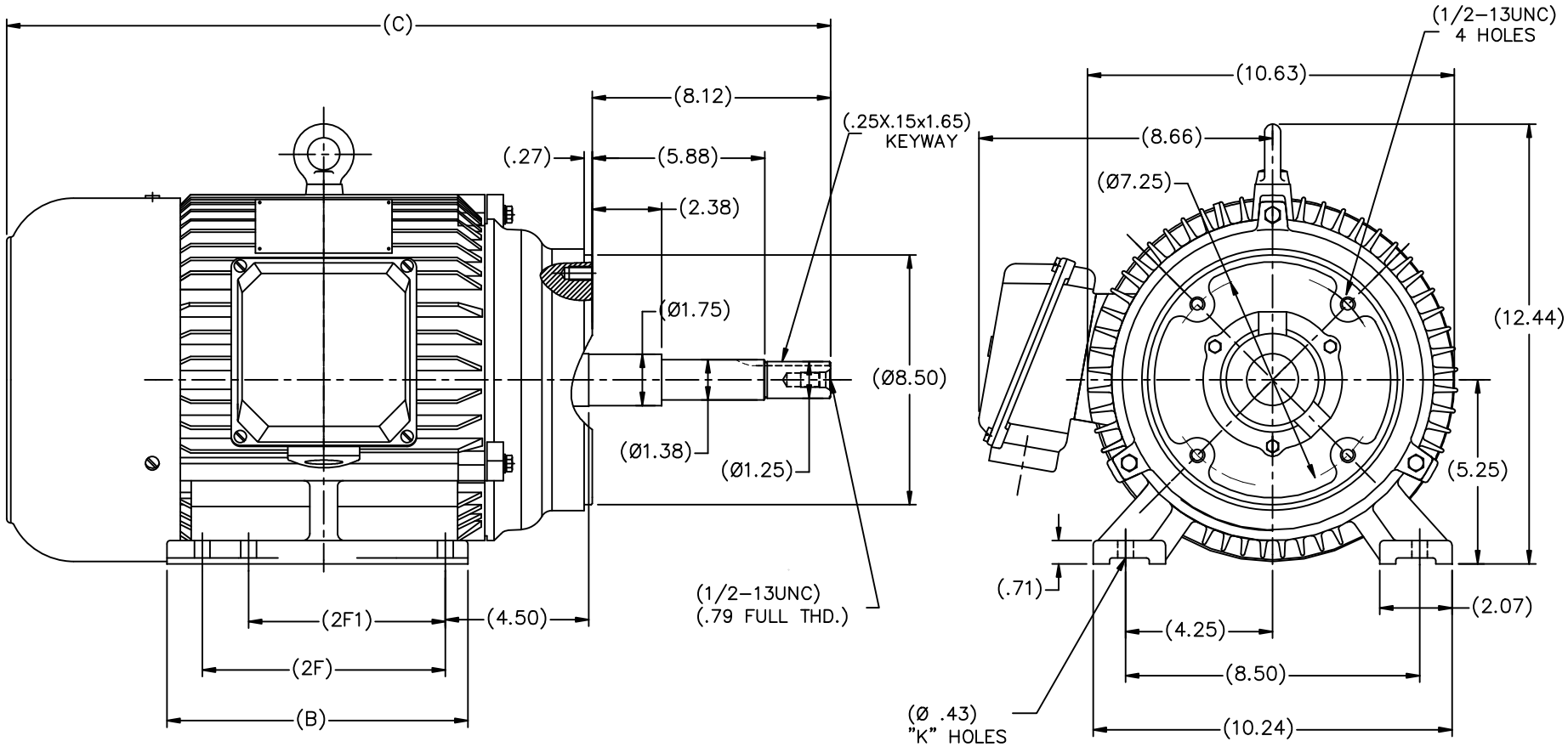

(DRAWING NOT TO SCALE)

TYPE	C	B	2F	2F1	K
N213JP	24.02	7.32	5.50	–	4
N215JP	25.43	8.82	7.00	5.50	6

NO.	REVISION	BY & DATE	CHK

TOLERANCES UNLESS SPECIFIED

DEC.	METRIC
.X	±2.5
.XX	±.76
.XXX	±.127
.XXXX	±.0127
ANG	±7'30"

REGAL-BELOIT CORPORATION

TITLE OUTLINE
N210JP –C FACE– TEFC

MAT'L.

FINISH

CAD FILE SS622305

RFP

DIST

SIZE B

DRAWING NO. SS622305

PAGE OF

REV.

DRAWN MOL 06–29–2011

CHK MOL 06–29–2011

APPD

SCALE 1=30

REF

FMF HEBEI

PREV

THIS DRAWING IN DESIGN AND DETAIL IS OUR PROPERTY AND MUST NOT BE USED EXCEPT IN CONNECTION WITH OUR WORK ALL RIGHTS OF DESIGN AND INVENTION ARE RESERVED
THIS IS AN ELECTRONICALLY GENERATED DOCUMENT – DO NOT SCALE THIS PRINT