SS75174

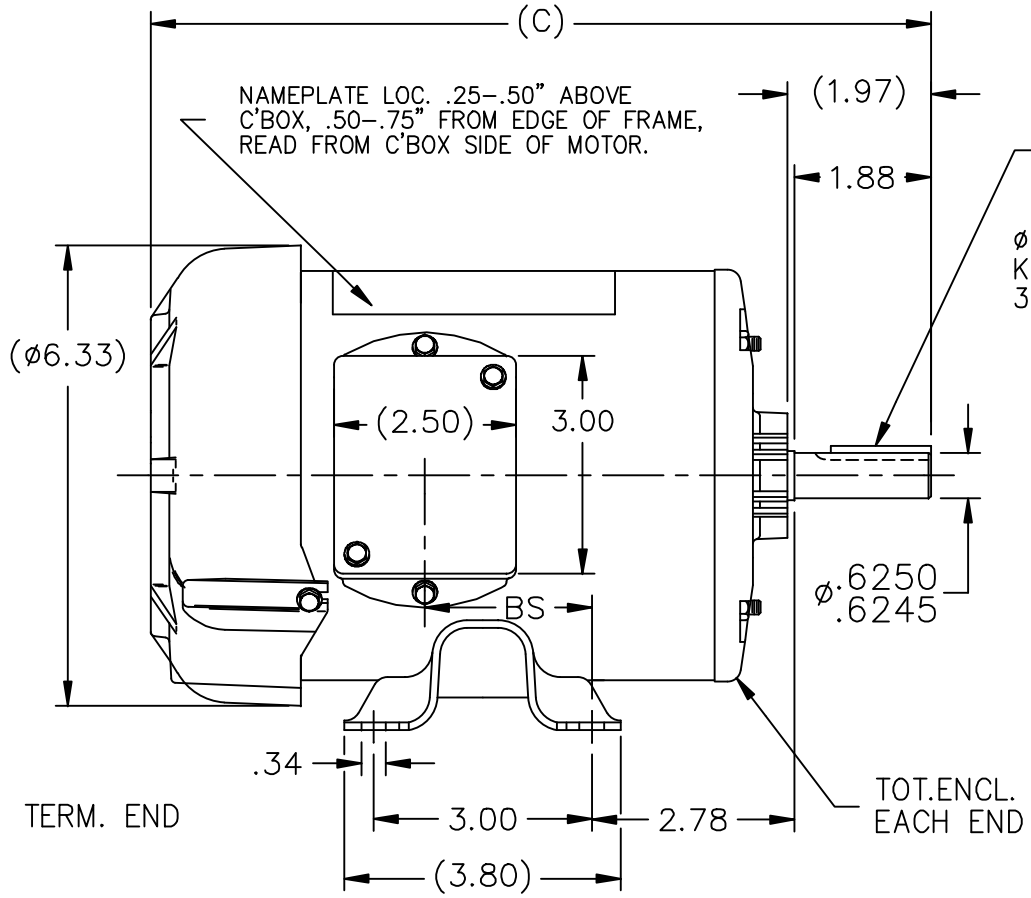


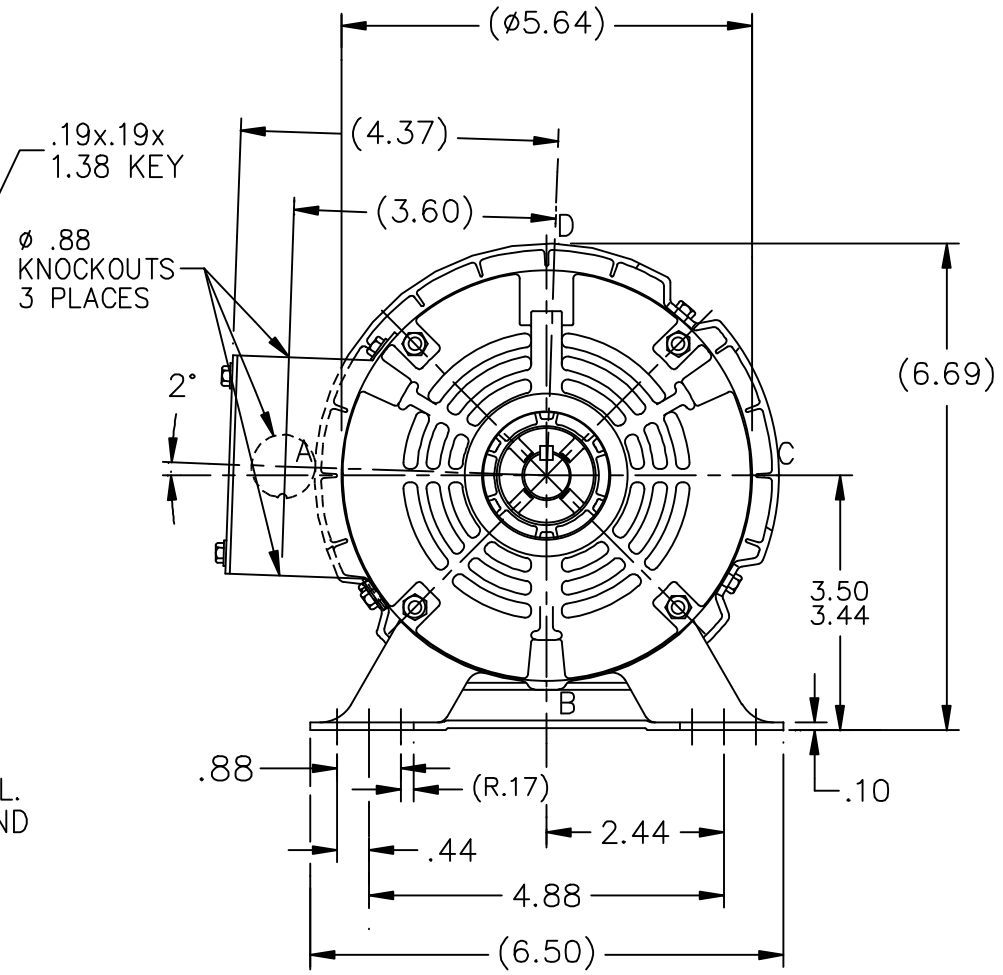


| DASH | BS | C | DASH | BS | C |
|---|---|---|---|---|---|
| 500 1-21-92 | 1.55 | 9.97 | 625 | 2.80 | 11.22 |
| 525 | 1.80 | 10.22 11-10-92 | 650 | 3.05 | 11.47 |
| 575 | 2.30 | 10.72 | 750 | 4.05 | 12.47 10-06-2000 |

| NO. | REVISION | BY & DATE | CHK |
|---|---|---|---|
| 8 | CHANGED THE KNOCK OUTS TO 3 | SVL 9-26-2012 | SVL |
| 7 | UPDATED DRAWING | TJW 04/16/2007 | ML |
| 6 | N.P. LOC. WAS .25 ABOVE C'BOX CN 29400-1057 | DRS 11-04-2002 | |
| 5 | ADDED 'BS' DIM. | TJB 11-09-1999 | |
| 4 | REVISED N.P. LOCATION TO .50–.75 | | |
| | WAS .25 CN 23975-129, -133 | MJD 09-02-1992 | |

TOLERANCES UNLESS SPECIFIED

| DEC. | INCHES |
|---|---|
| .X | ±.1 |
| .XX | ±.03 |
| .XXX | ±.005 |
| .XXXX | ±.0005 |
| ANG | ±7'30" |

MARATHON ELECTRIC

TITLE OUTLINE

MAT'L.

FINISH

CAD FILE ss75174

RFP

DIST WP

| | |
|---|---|
| DRAWN | RM 09-18-1991 |
| CHK | ML 09-20-1991 |
| APPD | GK 09-20-1991 |
| SCALE | 3=8 |
| REF | |
| FMF | |
| PREV | |

| SIZE | DRAWING NO. PAGE OF | REV. |
|---|---|---|
| A | SS75174 | 8 |