33E619W181K3

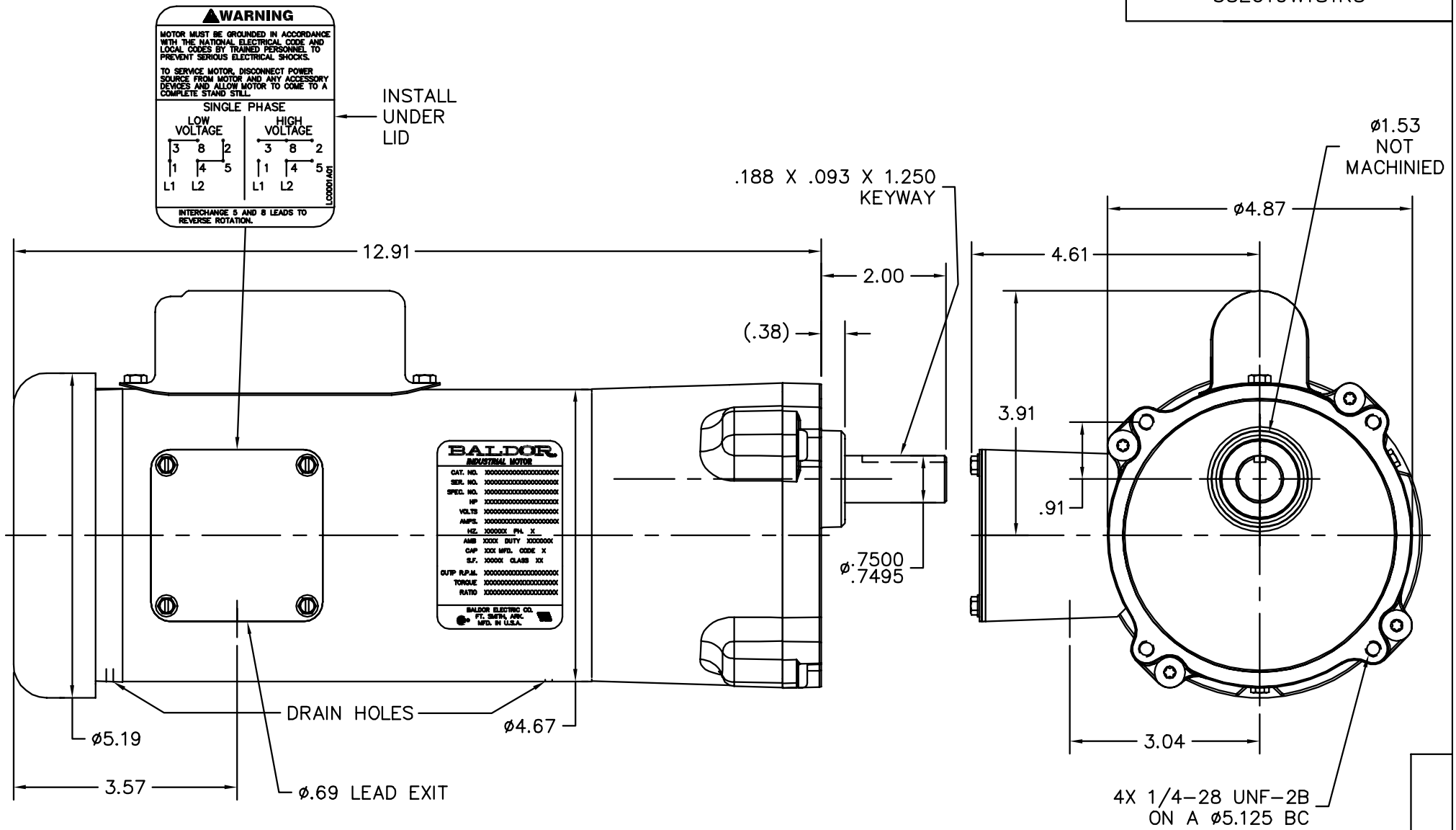

CUSTOMER IS RESPONSIBLE FOR DETERMINING THAT BALDOR'S PRODUCT WILL PERFORM SUITABLY IN THE INTENDED APPLICATION.

REV. DESC: ADD DRAIN HOLE DETAIL			BALDOR
REV. LTR: B	VERSION: 02	TDR: 000000778893	
FILE: \CKA\00031\281		REVISED: 11:20:56 12/21/2012	LY,33AC PSLH RSB TEFC .75 X 2.00
MTL: –		BY: CKBRISO	SH 1 of 2

33E619W181K3